

Apple Service Technical Procedures Volume One

TECHNICAL PROCEDURES
VOLUME ONE

P/N: 072-0062

Copyright 1983 by Apple Computer, Inc.

Revision: June, 1987

Apple Technical Procedures

Volume One

Table of Contents

	--Title page (contains build date)	-
Apple II	--Table of Contents	12/85
	(except page 0.2)	10/86
	--Take-Apart	09/82
	--Diagnostics	09/82
	(except page 2.1)	01/87
	--Troubleshooting	09/82
	--Illustrated Parts List	04/85
	(except page 4.0)	10/86
	(except pages 4.1, 4.2)	06/87
	(except page 4.3)	07/85
	(except pages 4.4, 4.5)	07/85
	(except pages 4.6, 4.7)	08/85
	(except page 4.8)	09/85
	--Appendix A	09/85
	--Appendix B	09/85
Apple ///	--Table of Contents	07/86
	--Service Notes	07/86
	--Take-Apart	09/82
	(except pages 1.14-1.16)	08/83
	(except page 1.17, 1.18)	04/86
	--Diagnostics	11/82
	(except page 2.3)	06/85
	(except page 2.7)	05/83
	(except pages 2.8, 2.10)	08/83
	--Troubleshooting	09/82
	(except page 3.1)	06/85
	(except pages 3.5-3.6)	08/82
	(except page 3.8)	06/85
	--Modifications	12/82
	(except pages 4.5-4.7)	08/83
	--Apple /// Plus Diagnostics	08/83
	(except page 5.3)	06/85
	--Illustrated Parts List	11/85
	(except pages 6.1, 6.6, 6.7)	02/86
	--Appendix A	09/85

Apple IIe

--Table of Contents	05/87
--Service Notes	09/86
(except pages 0.5, 0.7)	02/87
(except page 0.6)	06/87
--Take-Apart	09/82
(except pages 1.1,1.5,1.6,1.7,1.9)	06/85
(except pages 1.4, 1.8, 1.10)	10/83
--Diagnostics	05/83
(except page 2.1, 2.7-2.15)	05/87
(except page 2.2)	11/86
(except page 2.4)	10/83
(except pages 2.6)	10/86
--Troubleshooting	07/83
(except pages 3.1, 3.4, 3.4.1)	05/86
(except pages 3.3)	10/84
--Theory of Operations Overview - TS Appendix	05/86
--Other Procedures	01/85
--Illustrated Parts List	02/87
(except pages 5.6, 5.7)	06/87
--Apple II Memory Expansion Card	12/85
(except pages 6.1, 6.4)	02/87
(except page 6.6)	01/86
--Appendix A	02/87
--Appendix B	02/87

Apple IIc

--Table of Contents	05/87
--Basics	10/86
(except pages 1.1, 1.12, 1.13)	01/87
--Take-Apart	10/86
(except pages 2.1, 2.3, 2.6, 2.7, 2.17-2.20)	01/87
--Preventive Maintenance	10/86
--Diagnostics	05/87
--Troubelshooting	10/86
(except pages 5.3, 5.4)	01/87
--Additional Procedures	10/86
(except pages 6.1-6.4, 6.9)	01/87
(except pages 6.5-6.8)	02/87
(except pages 6.11, 6.16)	03/87
(except page 6.17)	12/86
--Illustrated Parts List	10/86
(except pages 7.2, 7.3)	02/87

Apple IIGS

--Table of Contents	02/87
--Basics	10/86
(except page 1.5)	12/86
--Take-Apart	10/86
(except page 2.5)	11/86
(except page 2.8)	04/87
--Diagnostics	10/86
(except page 3.3-3.14)	02/87
--Troubleshooting	10/86
(except pages 4.1, 4.7)	11/86
(except page 4.6)	04/87
--Additional Procedures	10/86
(except pages 5.1, 5.6-5.17)	02/87
(except pages 5.2, 5.3)	03/87
(except pages 5.4, 5.5)	11/86
--Illustrated Parts List	10/86
(except pages 6.1, 6.3, 6.12, 6.13)	02/87
(except pages 6.4, 6.5)	04/87

APPLE II TECHNICAL PROCEDURES

TABLE OF CONTENTS

Section 1 - Take-Apart

Opening the Case.....1.3
Removing and Replacing the Motherboard.....1.5
Removing and Replacing the Keyboard.....1.7
Replacing the Power Light.....1.8

Section 2 - Diagnostics

Getting Started.....2.2
Troubleshooting Chart.....2.3
Motherboard RAM Test.....2.4
Motherboard ROM Test.....2.5
Programmer's Aid Test.....2.6
Keyboard Test.....2.7
Game Paddle/Button Test.....2.8
Tape Read/Write/Verify/Test.....2.9
Color Bar Test.....2.10
Graphics Tablet Test.....2.12
Applesoft/Integer ROM Card Test.....2.13
Language Card Test.....2.14
Disk Interface Card Test.....2.16
Printer (Parallel) Card Test.....2.18
Serial/Communications Card Test.....2.20
Silentype Test.....2.22

Section 3 - Troubleshooting

Apple II Troubleshooting Chart.....3.3
Apple II Chip Swapping Chart.....3.5

©Apple Computer, Inc., 1985, 1986.
No part of this document may be reproduced in any form without the written permission of Apple Computer, Inc.

Apple and the Apple logo are registered trademarks of Apple Computer, Inc.

Section 4 - Illustrated Parts List

Finished Goods Assembly.....4.2
Motherboard.....4.4
ProFile Interface Card.....4.4
Keyboard Encoder Card.....4.4
Disk Controller Card.....4.6
Cables.....4.6
Parallel Printer Board.....4.6
Super Serial Card.....4.6
Power Supply Fuse.....4.8

Appendix A.

Apple II Keyboard/Keyswitch identification.....A.1

Appendix B.

Apple II Power Supply Switch Replacement.....B.1

NOTE: Technical Procedures for the Apple II Memory Expansion Card can be found in **Section 6** of the **Apple IIe Technical Procedures.**

Apple II Technical Procedures

Section 1

Take-Apart

Contents:

Opening the Case.....1.3
Removing the Motherboard.....1.5
Removing the Keyboard.....1.7
Replacing the Power Light.....1.8

NOTE: These procedures apply to the 150,000 or so pre-EMI Apple II's. Because of successive revisions of the Apple II design, you may notice slight differences in the configuration of screws and bolts on particular machines you work with. These differences will not significantly alter the procedures.

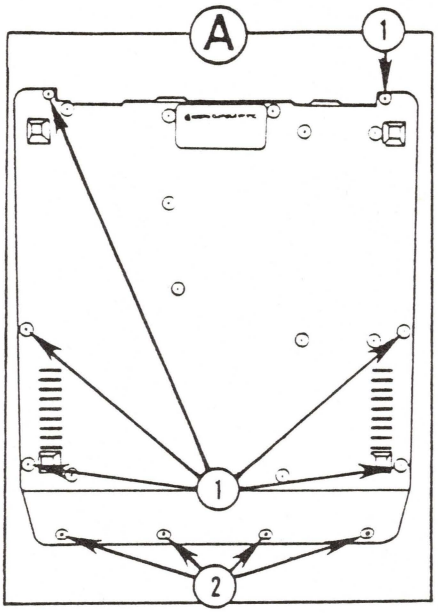

FIGURE A

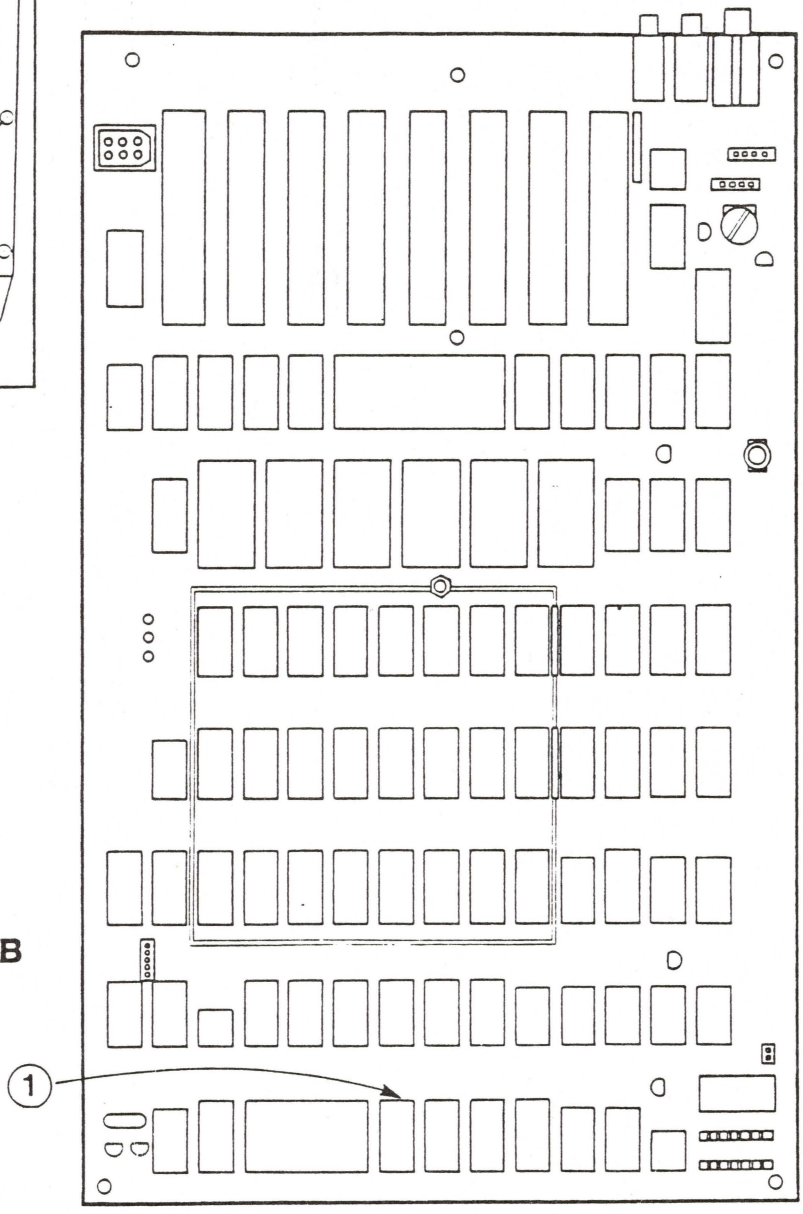

FIGURE B

A. OPENING THE CASE

1. Power down; disconnect the power cord and video cable.

2. Remove Apple lid.

3. TOUCH THE POWER SUPPLY TO REMOVE ANY STATIC CHARGE YOU MAY BE CARRYING. Then remove all peripheral cables and cards.

4. Turn the Apple upside down, resting the keyboard on a protective pad.

5. Remove the six flat-head screws from the three outside edges of the flat portion of Apple base (see Figure A, #1).

6. Remove the four round-head screws and lock washers from the front of the base (see Figure A, #2).

7. Grasping both base and housing, turn the Apple right side up.

8. Gently lift the front of the housing slightly off the base and unplug the keyboard connector from the front of the motherboard (see Figure B, #1).

   NOTE: If the keyboard connector is difficult to remove, use the IC puller.

9. Lift housing off base and set aside.

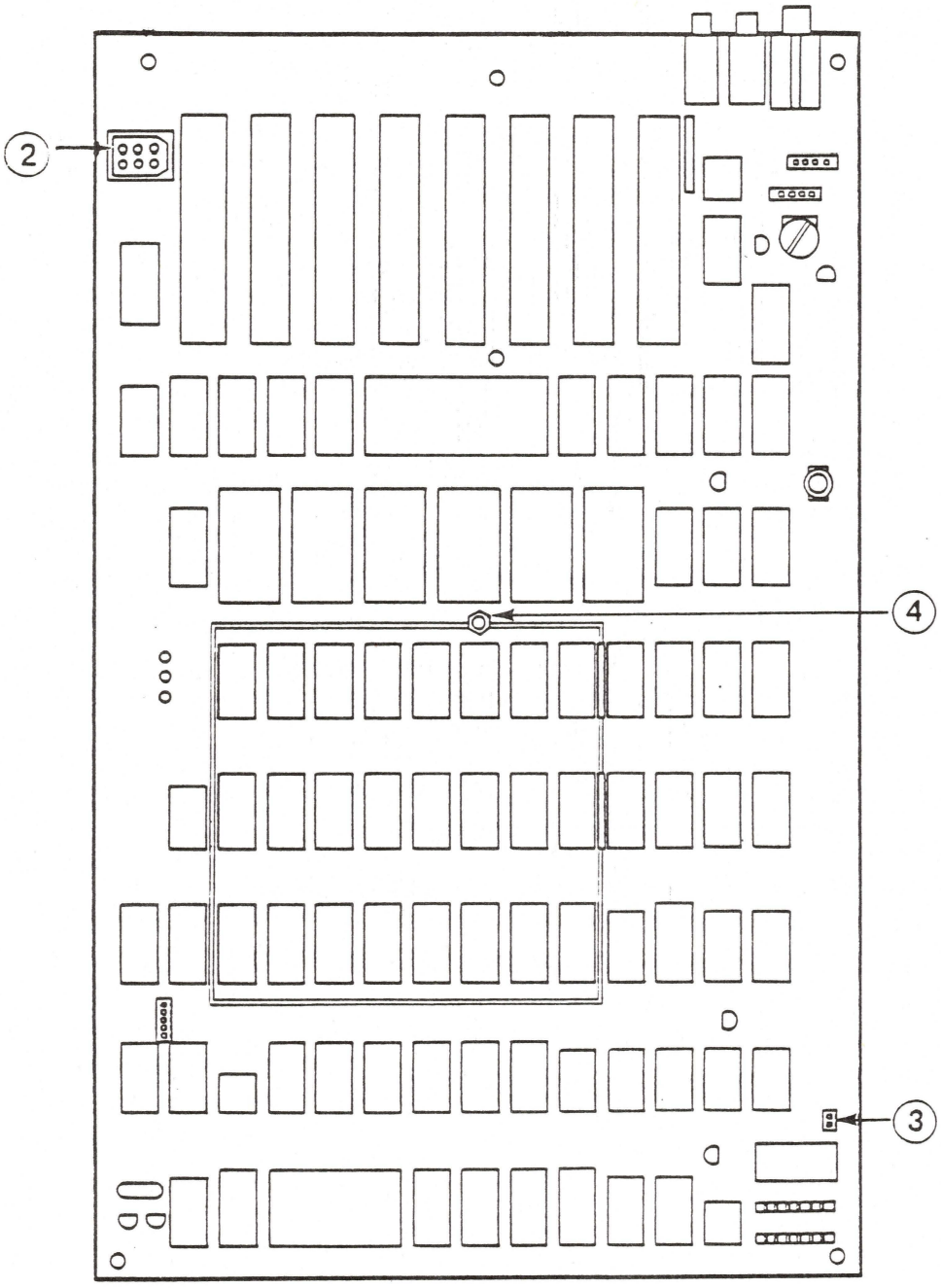

FIGURE B

B. REMOVING THE MOTHERBOARD

1. Power off. Follow procedures for opening the case (section A above, p.1.3.).

2. Pinch the front and rear sides of the power supply plug and pull the plug from the top of the motherboard (see Figure B, #2).

3. Unplug the speaker connector (see Figure B, #3).

4. Using a nutdriver, remove the 5/16" nut and lockwasher in the middle of the motherboard (see Figure B, #4).

5. Using a flatblade screwdriver or needlenose pliers, push in on the flanges of the six stand-offs: one in each corner and two between slots 4 & 5.

6. Carefully lift the board up and out.

REPLACING THE MOTHERBOARD

1. Place the motherboard into position over the four stand-offs at the corners of the board and the two between slots 4 and 5, and press board down into place.

2. Install washer and nut in the middle of the board and tighten just until snug.

3. Plug in speaker connector.

4. Plug in power supply.

5. Place housing over base.

6. Lift the front of the housing slightly and reinstall the keyboard connector. (Be sure pin 1 of the connector plug aligns with pin 1 of the socket.)

7. Grasping both base and housing, turn Apple upside down.

8. Make sure bent tab at back of base fits into slot in housing, then install lock washers and four round-head screws in front of base.

9. Install six flat-head screws in the three outside edges of base.

10. Turn the Apple rightside up.

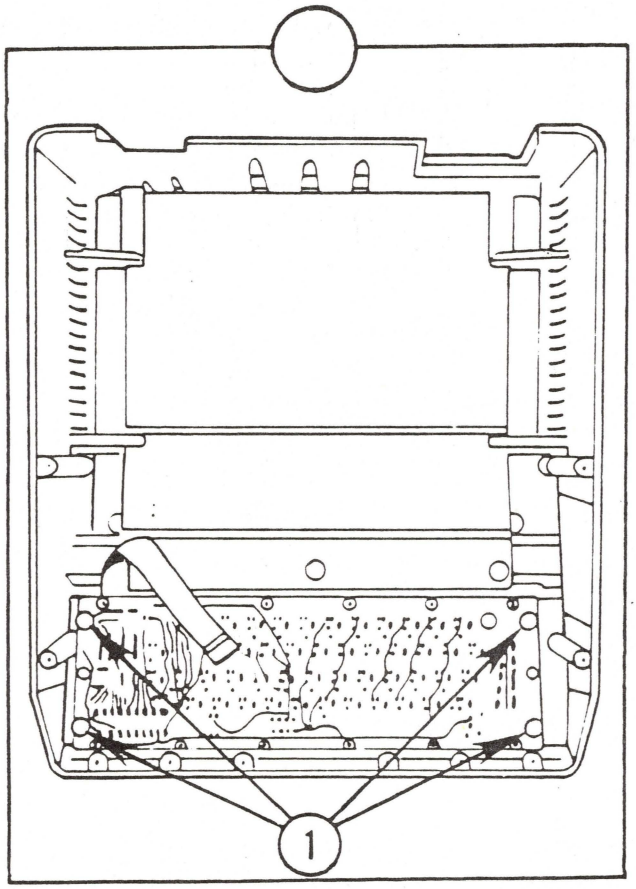

FIGURE C

C. REMOVING THE KEYBOARD

1. Follow procedures for opening the case (section A, p.1.3).

2. Turn Apple housing upside down so the keyboard rests on protective pad.

3. Remove the four nuts and lock washers (or screws) holding the keyboard to the housing (see Figure C).

4. Lift the keyboard free.

REPLACING THE KEYBOARD

1. Put the keyboard back in place.

2. Replace the nuts and lockwashers (or screws) which hold the keyboard to the Apple housing.

3. Turn the housing rightside up and place it over the base.

4. Lift the front of the housing slightly and plug the keyboard connector into its socket in row A of the motherboard. (Be sure pin 1 of the connector plug aligns with pin 1 of the socket.)

5. Grasping both base and housing, turn Apple upside down.

6. Make sure bent tab at back of base fits into slot in housing, then install lock washers and four round-head screws in front of base.

7. Install six flat-head screws in the three outside edges of base.

8. Turn the Apple rightside up.

D. REPLACING THE POWER LIGHT

1. Pry off the power light cap.
2. Lift off shift key cap.
3. If the light has a full shield, pry it off. (If it's a half shield, don't try to remove it.)
4. Lift out bulb, using fingers (if they're small enough) or needlenose pliers.
5. Replace bulb, making sure to put both wires into the small sockets.
6. Replace plastic shield.
7. Replace shift key cap and power light cap.

Apple II Technical Procedures

Section 2

Diagnostics

Contents:

Getting Started.....2.2
Troubleshooting Chart.....2.3
Motherboard RAM Test.....2.4
Motherboard ROM Test.....2.5
Programmer's Aid Test.....2.6
Keyboard Test.....2.7
Game Paddle/Button Test.....2.8
Tape Read/Write/Verify Test.....2.9
Color Bar Test.....2.10
Graphics Tablet Test.....2.12
AppleSoft/Integer ROM Card Test.....2.13
Language Card Test.....2.14
Disk Interface Card Test.....2.15
Printer (Parallel) Card Test.....2.17
Serial/Communications Card Test.....2.18
Silentype Test.....2.20

NOTE: The Apple II Product Diagnostic diskette **cannot** be used to test the Super Serial Card (which replaces the old Serial/Communications Card), the Apple II Parallel Card (which replaces the old Printer Card) or any other Apple interface cards introduced after 1982.

A. GETTING STARTED

The Apple II Product Diagnostics diskette contains a series of tests that are designed to help you troubleshoot system problems and make adjustments to commonly used Apple peripherals. The job aids in this package provide brief descriptions of the function of each test, and guidelines on how to use them.

Before you can use the Product Diagnostics, you must have 48K of memory in the system (all of the memory sockets on the motherboard must have memory ICs installed in them.)

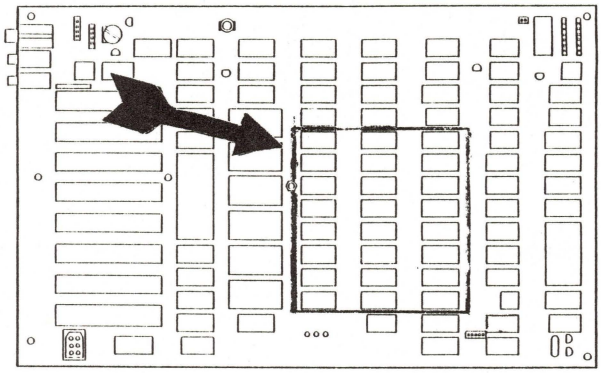

You must also have the P5A (341-0027) and P6A (341-0028) PROMs installed on the Disk Interface card in slot 6.

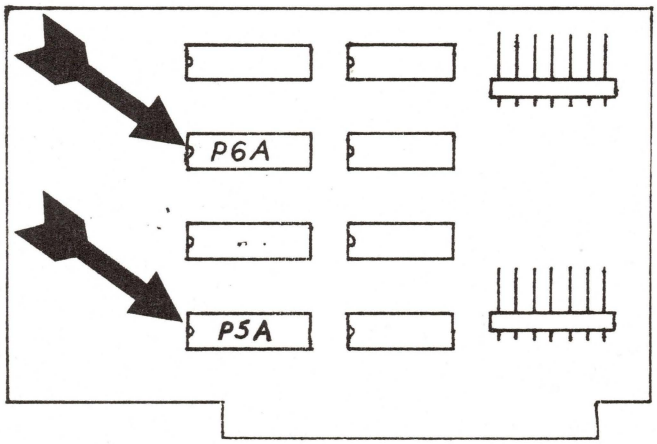

B. TROUBLESHOOTING CHART

This chart is designed to help you decide which test to use for most common problems. Just find the type of complaint that the customer has in the first column, then use the test listed in the second column.

Complaint	Test
Flaky system	Motherboard RAM (p.4)
Can't use some BASIC programs (motherboard BASIC)	Motherboard ROM (p.5)
Can't use some BASIC programs (firmware card BASIC)	AppleSoft/Integer ROM card (p.13)
Can't use some programs (language card language)	Language card (p.14)
Can't use some programs (not language related)	Motherboard RAM (p.4)
ROM Utilities won't work	Programmer's Aid #1 (p.6)
Missing characters	Keyboard (p.7)
Can't select menu items	Keyboard (p.7)
Paddle/Button problems	Game Paddle/Button (p.8)
Tape problems	Tape Read/Write/ Verify (p.9)
Display problems	Color Bar (p.10) Motherboard RAM (p.4)
Graphics Tablet problems	Graphics Tablet (p.12)
Disk problems	Disk I/F card (p.16)
Parallel printer problems	Printer card (p.18)
Serial printer problems	Serial/Communications card (p.20)
Silentype problems	Silentype test (p.22)
Modem problems	Serial/Communications card (p.20)

C. MOTHERBOARD RAM TEST

You would use this test if the customer told you that his system acted "flaky" or wouldn't run certain programs (after you try a known good copy of the suspect program to eliminate the possibility of a software problem). The CONTINUOUS TEST option is useful for finding intermittent problems, and for "burning-in" a system (running it for a while to make sure that it won't fail half an hour after the customer gets it home).

This diagnostic tests each RAM (Random Access Memory) IC on the motherboard. It also checks the RAM at location E2 on the Language Card if that card is installed. During the test, the disk drive is activated to cause electrical noise and put a heavy load on the power supply. These conditions make it more likely that marginal RAMs will fail the test.

To run the test:

1. Boot the Apple II Product Diagnostics diskette.

2. Use the <ESC> key to move the cursor to the MOTHERBOARD RAM TEST line on the main menu, then press <RETURN>.

3. When the title screen appears, you are given a choice of running the test or returning to the main menu (just in case you made a mistake). Press <RETURN> to run the test.

The test will run with no more inputs from you. First you will see a screen full of inverse "@"s, followed by a screen full of normal "?"s. Each of those screens lasts about 30 seconds, and some flickering during the first few seconds of each screen is normal. After these screens, you will see a screen of garbage (you'll know it when you see it), that will change a few times. When the test is over, the results screen will be displayed. This screen is self-explanatory. At the bottom of the screen is a mini-menu that works with the <ESC> and <RETURN> keys in the same fashion as the main menu.

4. If you want to run the memory test for an extended period, select CONTINUOUS TEST and press <RETURN>. The memory test will then cycle until you press <ESC>, which will take you back to the results screen.

If any bad ICs are indicated, replace them and run the test again.

D. MOTHERBOARD ROM TEST

You would use this test if a customer said that his system had problems running some or all BASIC programs.

This test checks each ROM (Read Only Memory) in the INTEGER or APPLESOFT set on the motherboard, whichever is present.

To run the test:

1. Boot the Apple II Product Diagnostics diskette.

2. Use the <ESC> key to move the cursor to the MOTHERBOARD ROM TEST line on the main menu, then press <RETURN>.

NOTE: This test MUST be observed during operation as it does not "keep records" and report its results as the RAM test does.

The test will run with no other inputs from you. As each ROM is tested the program will display the name of the ROM. After testing, it will report either "NO ERRORS FOUND" (for a good ROM) or "CAN'T MATCH CODE" (for a bad one). If there is an error, the test will stop; otherwise it will go on to the next ROM. When all of the ROMs have been tested, it will return to the main menu.

If one of the ROMs fails, replace it and run the test again.

E. PROGRAMMER'S AID #1 TEST

You would use this test if the customer complains that any or all of the functions supported by the Programmer's Aid #1 ROM aren't working correctly. (See the Progammer's Aid #1 manual for a list.)

The test checks the Programmer's Aid #1 utility ROM.

To run the test:

1. Install the Programmer's Aid #1 ROM (341-0016) at the D0 position on the motherboard (location F11) if you have an Apple II, or the INTEGER ROM card (location A1) if you have an Apple II+.

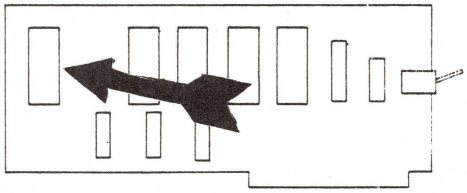

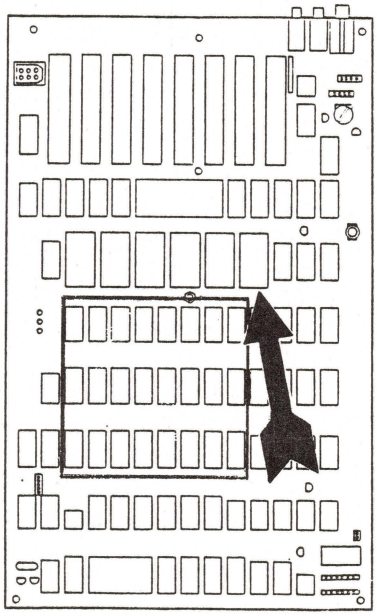

2. Boot the Apple II Product Diagnostics diskette.

3. Use the <ESC> key to move the cursor to the PROGRAMMER'S AID #1 TEST line on the main menu, then press <RETURN>.

NOTE: This test MUST be observed in operation, as it does not "keep records" and report its results as the RAM test does.

The test will run with no further inputs from you. The message "NO ERRORS ENCOUNTERED" will be displayed if the ROM is good, otherwise the message "UNABLE TO MATCH CODE" will appear. The program will then return to the main menu.

If the ROM fails, replace it and run the test again.

F. KEYBOARD TEST

You would use this test if the customer complains about missing characters when entering data/commands/text or not being able to select functions (like menu items) when using programs.

This test checks (actually, it allows you to check) each key on the keyboard, the keyboard encoder circuits, and the keyboard cable. The test procedure also checks the operation of the shift and control keys in combination with other keys.

To run the test:

1. Boot the Apple II Product Diagnostics diskette.

2. Use the <ESC> key to move the cursor to the KEYBOARD TEST line on the main menu, then press <RETURN>.

After the test is loaded, an introductory screen will be displayed. This screen tells you how to run the test, and explains what you will see on the test screen.

3. Press any key to proceed to the test. When the test screen is displayed, blank out the keyboard "picture" by pressing keys. Make sure that you test both shift keys in the process. To extinguish the inverse characters, hold down the <CTRL> key and press the appropriate letter keys. The <ESC>, <RETURN>, and <ARROW> keys blank out the brackets, backslash, and underscore that represent them on the "picture".

4. After all of the "keys" are blanked out, press the SPACEBAR to return to the menu.

If any single key fails the test, replace the keyboard mechanical assembly (or just the key if you wish). Any other problem indicates a bad keyboard electronic assembly (piggy-backed to the rear of the keyboard mechanical assembly) or the cable, so replace one of them (then the other if the problem remains). After replacing the appropriate module, run the test again.

G. GAME PADDLE/BUTTON TEST

You would use this test if the customer complains that his paddles aren't working properly.

This test allows you to check the game paddles/buttons, and the circuitry on the motherboard that interfaces with the paddles/buttons.

To run the test:

1. Connect the Game Paddles to the GAME I/O socket near the right rear corner of the motherboard (to the right of the front end of the last peripheral slot).

2. Boot the Apple II Product Diagnostics diskette.

3. Use the <ESC> key to move the cursor to the GAME PADDLE/BUTTON TEST line on the main menu, then press <RETURN>.

After the test is loaded, an introductory screen will be displayed. This screen explains how to use the test screen.

4. Press any key to get to the test screen. Markers on the bottom and right edges of the white square show the actual values being read from the paddles.

5. Slowly rotate each paddle control through its entire range. The asterisk should move around the white area. The markers should keep pace, indicating values from 0 to 255. The sweep of values should cover the full range of rotation of the control (i.e. they shouldn't read 0 or 255 when the control isn't near one of it's limits).

6. Push each paddle button. The white area should turn black and the asterisk should turn white. The "colors" will swap repeatedly if the button is held in.

7. Press <ESC> to return to the main menu when you have finished.

If any part of the test fails, replace the paddles and run the test again. If it still fails, replace the motherboard and run the test again. Alternatively you could test the paddles on a system with a known good motherboard. If the test fails there, the paddles are bad; if it passes, the motherboard in the customer's system is bad.

H. TAPE READ/WRITE/VERIFY TEST

You would use this test when the customer complains that he can't save data or programs on tape or can't read them from tape.

This test checks the tape recorder itself, the audio cables, and the circuitry on the motherboard that writes to and reads from a tape recorder. It can also be used to "calibrate" a tape recorder to work with the system.

To run this test:

1. Connect a cable between the CASSETTE OUT jack on the rear of the Apple II and the input (MIC) jack on the recorder (this is for the write phase). Connect another cable from the output (MON) jack on the recorder to the CASSETTE IN jack on the Apple II (this is the read phase).

2. Put a scratch (expendable) tape in the recorder and rewind it. Set the record and playback levels to mid-range.

3. Boot the Apple II Product Diagnostics diskette.

4. Use the <ESC> key to move the cursor to the TAPE READ/WRITE/VERIFY TEST line on the main menu, then press <RETURN>.

Instructions will be displayed for each phase of the test. Simply follow them as they appear. The write phase and read phase will each take about 10 seconds. The message "TAPE READ/WRITE TEST OK" will appear after the test is finished.

If errors are found, you will be told to readjust the recorder and try again.

If the test locks up (doesn't do anything new after a long time), it means that nothing is being read from the tape. Make sure that the recorder is working (you can test it with a microphone and your voice). The cables must also be good to carry the signal both ways. Check them for continuity and shorts, or try a different set. The volume level must also be correctly set - that is a trial and error process (the technical specification is 1V peak to peak at the CASSETTE INput jack).

If the recorder is working and set up properly (maybe it works with another system?) and the cables are good, replace the motherboard and run the test again.

I. COLOR BAR TEST

You would use this test if the customer complained about display problems.

This test allows you to check the display device (monitor or TV), the video cable, and the video generating circuitry on the motherboard.

To run the test:

1. Boot the Apple II Product Diagnostics diskette.

2. Use the <ESC> key to move the cursor to the COLOR BAR TEST line on the main menu, then press <RETURN>.

An introductory screen will be displayed, giving instructions on how to use the test screen. You are also given a choice of returning to the main menu or proceeding with the test.

3. Press <RETURN> to proceed with the test.

CONTINUED ON REVERSE

The test screen that is displayed consists of a set of color bars in a frame. The numbers along the bottom of the frame are the color codes.

The colors are:

0=black	1=magenta	2=dark blue	3-purple
4=dark green	5=gray	6=med blue	7=light blue
8=brown	9=orange	10=gray	11=pink
12=green	13=yellow	14=aqua	15=white

NOTE: Don't try to adjust the color trimmer capacitor on a black and white display; you won't see any changes.

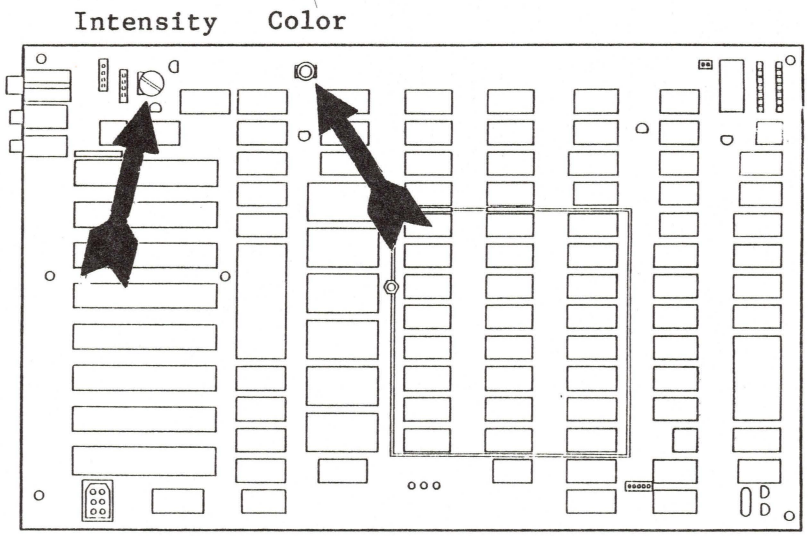

4. When you are finished, press <ESC> to return to the main menu.

If the picture cannot be made acceptable, try a different monitor and/or cable and run the test again. If the problem persists, replace the motherboard and run the test again.

J. GRAPHICS TABLET TEST

You would use this test if the customer complained about problems with a graphics tablet.

This test allow you to check the operation of the Graphics Tablet, Graphics Tablet Pen, and Graphics Tablet Interface Card.

To run the test:

1. Install the Graphics Tablet Interface card in slot 4 and connect the tablet and pen to it.

2. Boot the Apple II Product Diagnostics diskette.

3. Use the <ESC> key to move the cursor to the CARD TESTS line on the main menu, then press <RETURN>.

4. Use the <ESC> key to move the cursor to the GRAPHICS TABLET TEST line on the card tests menu, then press <RETURN>.

5. The first screen lists some things that must be done before the test will run. If any of the conditions have not been met, do whatever is necessary to meet them and start again. Otherwise, press <ESC> to continue.

The test will check the ROM on the interface card and report whether it is good or bad, give you instructions on adjusting the interface card, display a set-up screen for doing the adjustment, give instructions for testing the tablet, display a screen for that test, and tell you if the tablet works.

If the ROM test fails, replace the ROM and run the test again. If you can't get the correct display during the interface card adjustment, replace the pen and run the test again. If the attempted repair doesn't fix the problem, replace the interface card. If you get missing dots during the surface test, replace the tablet.

K. APPLESOFT/INTEGER ROM CARD TEST

You would use this test if the customer complained about problems in running programs written in the type of BASIC contained on the firmware card.

This test checks each ROM in the APPLESOFT or INTEGER set on a firmware card, whichever is installed.

To run the test:

1. Install the firmware card in slot 0.

2. Boot the Apple II Product Diagnostics diskette.

3. Use the <ESC> key to move the cursor to the CARD TESTS line on the main menu, then press <RETURN>.

4. Use the <ESC> key to move the cursor to the APPLESOFT/INTEGER ROM CARD line on the card test menu, then press <RETURN>.

NOTE: This test MUST be observed during operation as it does not "keep records" and report its results as the RAM test does.

The test will run with no more inputs from you. As each ROM is tested the program will display the name of the ROM. After testing the ROM it will report either "NO ERRORS FOUND" (for a good ROM) or "CAN'T MATCH CODE" (for a bad one), then it will go on to the next ROM. When all of the ROMs have been tested, it will return to the card test menu.

If any of the ROMs fail, replace it and run the test again.

L. LANGUAGE CARD TEST

You would use this test if the customer complained about problems loading or running programs that use the language card (e.g. Pascal, Pilot, Logo, Fortran, Cobol, etc.).

This test checks the RAM and the Autostart ROM located on the language card. The disk drive is activated during the test to create electrical noise and to put a heavy load on the power supply. These conditions make it more likely that marginal RAM will fail.

To run the test:

1. Install the Language card in slot 0. The cable replaces the RAM IC at location E3 on the motherboard (the left rear corner of the outlined memory area).

2. Boot the Apple II Product Diagnostics diskette.

3. Use the <ESC> key to move the cursor to the CARD TESTS line on the main menu, then press <RETURN>.

4. Use the <ESC> key to move the cursor to the LANGUAGE CARD line on the card test menu, then press <RETURN>.

The test will check the language card RAM and display the results. The results screen has a mini-menu at the bottom that works with the <ESC> and <RETURN> keys as the other menus do. RETEST and BEGIN CONTINUOUS TEST refer to the RAM test only, not to the entire language card test.

5. Select PROCEED WITH TEST and press <RETURN>.

The test will display two status pages, then test the Autostart ROM. You'll have to press a key to proceed from each of those steps to the next. For the ROM test, the message "NO ERRORS ENCOUNTERED" (for a good ROM) or "CANNOT MATCH CODE" (for a bad ROM) will be displayed briefly (so you must be watching) before the test returns to the card test menu.

If any RAM is shown as bad on the results screen, replace the bad IC and run the test again. If any status states are bad, replace the language card and run the test again. If the ROM fails, replace the ROM and run the test again.

M. DISK I/F CARD TEST

You would run this test if the customer complained about problems in saving programs or loading them from a diskette.

This test checks the P5 or P5A PROM installed at location D3 on the Disk Interface card, whichever is installed.

To run the test:

1. Note whether the Disk Interface card has a P5 (341-0009) or P5A (341-0027) PROM installed at location D3.

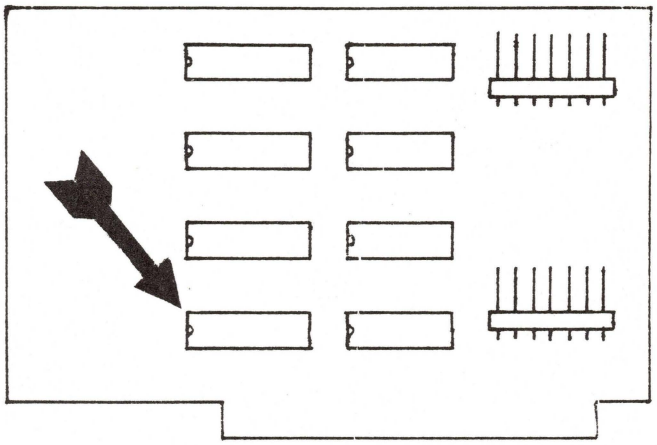

2. Install the Disk Interface card in slot 6.

NOTE: If you are unable to boot using the Interface card being tested (because it has a P5 PROM or won't work), install it in a slot other than 0 or 6, and boot with a known good Interface card in slot 6.

3. Boot the Apple II Product Diagnostics diskette.

4. Use the <ESC> key to move the cursor to the CARD TESTS line on the main menu, then press <RETURN>.

5. Use the <ESC> key to move the cursor to the DISK I/F CARD line on the card test menu, then press <RETURN>.

CONTINUED ON REVERSE

6. When prompted to do so, enter the slot number where the Disk Interface Card is installed.

7. When asked if the language card PROM is installed, answer Y if there is a P5A PROM or N if there is a P5 PROM on the card.

NOTE: This test MUST be observed while running, as it doesn't "keep records" or maintain a results display like the RAM test.

The test will finish with no more inputs from you. If the PROM checks out OK, it will tell you so. If not, the message "UNABLE TO MATCH CODE" will be displayed. After reporting its results, it returns to the card test menu.

If the PROM fails, replace it and run the test again. If the problem persists, replace the interface card and run the test again.

N. PRINTER CARD TEST

You would use this test if a customer complained about problems in the operation of a parallel printer (i.e. DMP, Epson or Centronics).

This test checks the PROM on the APPLE Parallel Interface card.

To run the test:

1. Turn the Apple II off.

2. Install the Parallel Interface card in peripheral slot 1.

3. Boot the Apple II Product Diagnostics diskette.

4. Use the <ESC> key to move the cursor to the CARD TESTS line on the main menu, then press <RETURN>.

5. Use the <ESC> key to move the cursor to the PRINTER CARD line on the card test menu, then press <RETURN>.

6. When prompted to do so, enter the slot number where the Parallel Interface card is installed (slot 1).

NOTE: This test MUST be observed during operation, as it doesn't "keep records" and it returns to the menu when it is done.

The test will run with no further inputs from you. When it is done, it will report "CODE CHECKS OUT OK" for a good "PROM" or "UNABLE TO MATCH CODE" for a bad one.

If the PROM fails the test, replace it and run the test again. If the problem persists, replace the Interface card.

O. SERIAL/COMMUNICATIONS CARD TEST

You would use this test if the customer complained about problems in the operation of a serial printer (e.g. Qume or Diablo) or modem.

This test checks the Apple Serial Interface card and the Apple Communications Interface card. Both cards must be installed for the test to operate.

To run the test:

1. Install the Serial Interface Card in slot 1, and the Communications Interface card in slot 2.

2. Connect a loop-back jumper cable between the Serial Interface and Communications Interface connectors.

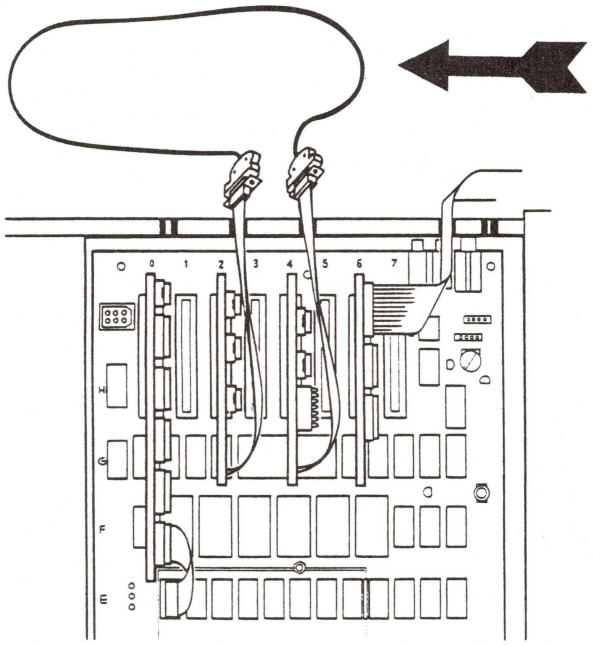

3. Boot the Apple II Product Diagnostics diskette.

4. Use the <ESC> key to move the cursor to the CARD TESTS line on the main menu, then press <RETURN>.

5. Use the <ESC> key to move the cursor to the SERIAL/COMMUNICATION CARD line on the card test menu, then press <RETURN>.

CONTINUED ON REVERSE

6. When prompted to do so, enter the slot numbers for the Serial Interface card (slot 1) and the Communication Interface card (slot 2). The test will check the PROMs on both cards, reporting their status (CODE CHECKS OUT OK or UNABLE TO MATCH CODE).

7. When the switch test screen appears, make sure that the picture matches the actual DIP switch positions on the Serial card. Then manipulate each switch to both of its positions and watch to see that the picture follows the switch. Finish up with all of the switches ON except switch #2.

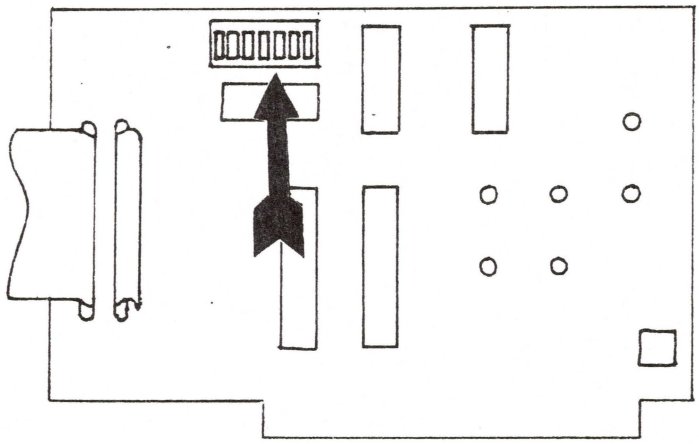

8. Press <ESC>. When the communications test screen appears, slowly type a few characters. The characters that you type should appear on both the SENT and RECEIVED lines.

9. When you are satisfied that the communication from Serial card to Communications card is good (about 8 characters), press <ESC> ONCE. This will reverse the direction of the test. The screen will look almost identical except for the labels on the SENT and RECEIVED lines.

10. Slowly type a few more characters. They should appear on the SENT and RECEIVED lines as you type them.

11. When you are satisfied that the Communications card is talking to the Serial card properly, press <ESC>.

The test will display a status screen, telling you what revision PROMs are on each card and whether the cards are working properly.

If any of the PROMs fails the test, replace it. If the problem persists, replace the appropriate card. If the switch setting test doesn't work, replace the Serial card. If the communication test fails, replace the Serial card. If it still fails, replace the Communications card. After any of these actions, run the test again.

P. SILENTYPE TEST

You would use this test if the customer complained about poor print quality or any problems in the operation of the Silentype.

This test checks the PROM and RAM on the Silentype Interface card and the various functions of the printer mechanism. You have the option at the beginning of the test of printing a printer alignment pattern instead of running the test.

To run the test:

1. Install the Silentype Interface card in slot 1 and connect the Silentype to it.

2. Boot the Apple II Product Diagnostics diskette.

3. Use the <ESC> key to move the cursor to the CARD TESTS line on the main menu, then press <RETURN>.

4. Use the <ESC> key to move the cursor to the SILENTYPE TEST line on the card test menu, then press <RETURN>.

5. When given the option of aligning the print head, reply "N" (unless you are doing an alignment, which is beyond the scope of this lesson).

The test will check the PROM (firmware) and RAM on the Silentype Interface card and report the status of each. It will then check the margin switch on the Silentype and report its status.

6. The test will now exercise the carriage and paper drives, printing and variable intensity circuits, and bi-directional print function. It takes a few seconds after the screens appear before the tests actually start. Judge the printer's performance in each step according to the standards given by the diagnostic. Enter "Y" if it is acceptable or "N" if it isn't. If all of the tests pass, the test will return to the card test menu.

It would be redundant to list here what you should do if a part of the Silentype test fails, because a list of recommended corrective actions is provided by the test itself in the event of failure (including if you tell it that the result of one of the print function tests was unacceptable).

Apple II Technical Procedures

Section 3

Troubleshooting

Contents:

Apple II Troubleshooting Chart.....3.3
Apple II Chip Swapping Chart.....3.5

Apple II Troubleshooting Chart

NOTE: The Probable Causes are listed in the order of probable failure. It is recommended that Probable Causes are checked or replaced in the order listed.

Symptom	Probable Cause
Apple will not boot; drive comes on.	1) RAM row E. 2) RAM on Language Card at location E2. 3) Motherboard
Programs run erratically, often crash.	1) RAM 2) Motherboard
No beep and no message is displayed; monitor has random characters on screen when the Apple is turned on; drive does not come on.	1) RAM row C. 2) "F8" ROM at location F3 on the motherboard. 3) "F8" ROM on the Language Card at location E2. 4) Motherboard
Peripheral does not work properly.	1) Motherboard
Keys fail to remove appropriate character from the keyboard test on the Apple II diagnostic.	1) Keyboard Cable 2) Keyboard Electronic 3) Keyboard Mechanical 4) Motherboard
AppleSoft or Integer BASIC fails to operate or is erratic.	1) ROM 2) Motherboard
Game I/O port malfunction (Check with diagnostic.)	1) Game Paddles 2) Motherboard
All video malfunctions (Graphics and Text)	1) Motherboard
Cassette Interface malfunction.	1) Motherboard

Apple II Troubleshooting Chart

Sympton	Probable Cause
Apple II system dead. (No beep, no video, no power light).	1) Power Supply 2) Motherboard
Apple II system dead. (No beep, no video, power light on).	1) Power Supply 2) Motherboard
Speaker malfunction	1) Speaker 2) Motherboard
No video display	1) Video Cable 2) Video Pot adjustment 3) Motherboard

Apple II Chip Swapping Chart

Symptom	Location(s)	Defective Chip Type
Dead Apple System (Power On Light)	A2	74LS00
	B1	74S174
	B2	74S86
	B13	74LS02
	C1	74LS153
	C2	74LS195
No RESET or No Response	A13	555
	B5	74LS174
	B6	74LS257
	B7	74LS257
	B8	74LS174
	B11	74LS08
	C14	74LS32
	E11,12,13	74LS153
	F12	74LS138
	F13	74LS138
	F14	9334
	H1	74LS08
	H3,4,5	8T97
	H8	6502
	H10,11	8T28
	H14	74LS5251
Apparent ROM Problems	F12	74LS13
	H1	74LS08
Apparent RAM Problems	A2	74LS00
	B5,8	74LS174
	C14	74LS32
	D2	74LS20
	E2	74LS139
	E11,12,13	74LS153
	F2	74LS139
	H1	74LS08
No Video (Speaker does Beep)	A2	74LS00
	A8	74LS257
	A9	74LS151
	A10	74LS194
	B2	74S86
	B10	74LS74
	B13	74LS02
	C2	74LS195
	C11	74LS04
	D11,12,13,14	74LS161

Apple II Chip Swapping Chart

Symptom	Location(s)	Defective Chip Type
No Text Mode	A3	74166
	A5	1513
	A8	74LS257
	A9	74LS151
	A10	74LS194
	B2	74S86
HIRES or LORES Problem	A0	74LS194
	A8	74LS257
	A9	74LS151
	A11	74LS74
	B4,9	74LS194
	B10	74LS74
	C11	74LS04
	C12	74LS257
	F14	9334
	H1	74LS08
	J1	74LS257
Dark Screen	A2	74LS00
	B1	74LS174
	B2	74S86
	C1	74LS153
	C2	74LS195
V or H SYNC Fails	C13	74LS51
	C14	74LS32
	D11,12,13,14	74LS161
Wrong Page or Video Mode	B5,8	74LS174
	B11	74LS08
	B12	74LS11
	B13	74LS02
	C11	74LS04
	C12	74LS257
	E11,12,13	74LS153
	E14	74LS283
	F2	74LS139
	F14	9334
	H1	74LS08
	J1	74LS257

Apple II Chip Swapping Chart

Symptom	Location(s)	Defective Chip Type
Wrong or Bad CHRS	A3	74166
	A5	1513
	B5,8	74LS174
	B6,7	74LS257
Bad Cursor	A3	74166
	B2	74S86
	B11	74LS08
	B13	74LS02
Bad Graphics	A8	74LS257
	A9	74LS151
	A10	74LS194
	A11	74LS74
	B4,9	74LS194
No Color	B12	74LS11
	B13	74LS02
	C13	74LS51
Game Paddles Problem	F13	74LS138
	H13	558
	H14	74LS251
Cassette Loading Problem	F13	74LS138
	H14	74LS251
	K12	741 OP AMP
Cassette Saving Problem	F13	74LS138
	K13	74LS74
Speaker Problem	F13	74LS138
	K13	74LS74
Keyboard Problem	A12	74LS02
	B6,7	74LS257
	B10	74LS74
	C11	74LS04
	F13	74LS138
Peripheral Card in Slot Won't Work	H2,12	74LS138

Apple II Technical Procedures

Section 4

Illustrated Parts List

The figures and lists below include all piece parts that can be purchased separately from Apple for the Apple II/II+, along with their part numbers. These are the only parts available from Apple. Refer to your Apple Service Programs manual for prices.

Contents:

Finished Goods Assembly.....4.2
Motherboard.....4.4
ProFile Interface Card.....4.4
Keyboard Encoder Card.....4.4
Disk Controller Card.....4.6
Cables.....4.6
Parallel Printer Board.....4.6
Super Serial Card.....4.6
Power Supply Fuse.....4.8

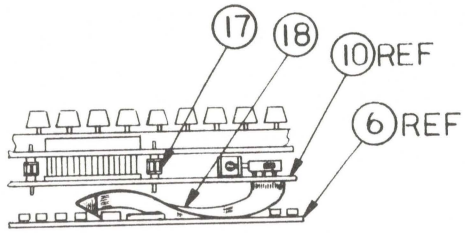

DETAIL B

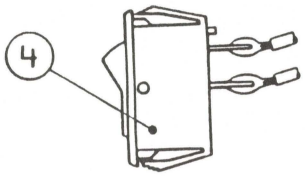

705-0023

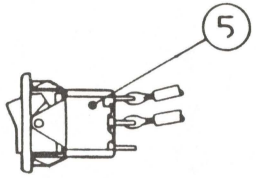

705-0065

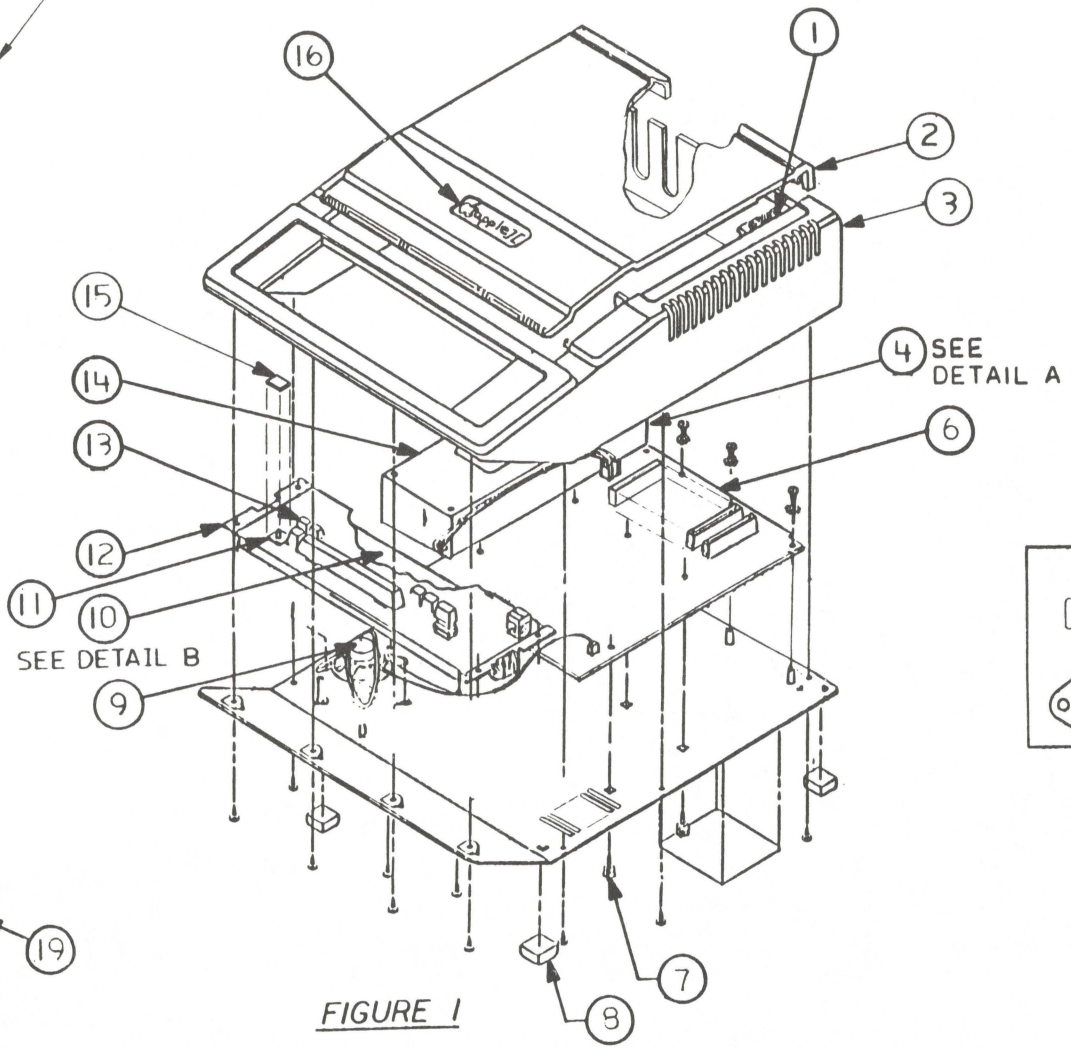

FIGURE 1

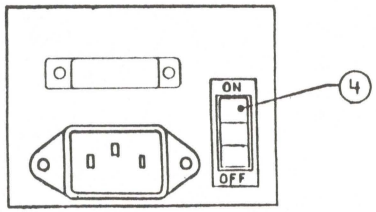

DETAIL A

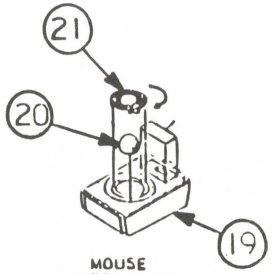

MOUSE
BOTTOM VIEW
SCALE: NONE

APPLE II/II+ - FINISHED GOODS ASSEMBLY (Figure 1)

Item	Part No.	Description
1	830-0002	Apple II/II+ Hedlock Fastener
2	810-0359	Apple II Lid
3	810-0360	Apple II Housing
4	705-0023	Apple II/II+ Switch, Power Supply, Rocker, Two Pole
5	705-0065	Switch, Power Supply, Rocker, Three Pole
6	661-91205	Apple II/II+ Motherboard, RFI, w/RAM
	661-91207	Apple II+ Motherboard, RFI, w/RAM
7	830-0003	Apple II/II+ PCB Standoff Fastener
8	865-0001	Apple II/II+ Rubber Foot
9	600-0009	Apple II/II+ Speaker Assembly
10	661-91023	Apple II/II+ Keyboard Elec Encoder
11	710-0007	Apple II/II+ Lamp, Bi-pin, 5V, 115A
12	661-91073	Apple II/II+ Alps Keyboard
13	605-0133	Apple II/II+ Keycap Set - Sculptured
	605-0119	Apple II/II+ Keycap Set - Non-sculptured
14	661-91039	Apple II Power Supply, Astec, non-RFI
	661-91040	Apple II/II+ Power Supply, RFI
15	815-0835	Apple II Power On Lens
16	825-0036	Apple II+ Nameplate
17	830-0081	Dual Locking Keyboard Spacer
18	590-0007	Cable, AII/II+ Keyboard
19	661-0259	Apple II/II+ Mouse Assembly
20	699-8001	Rubber Coated Mouse Ball
21	815-0409	Mouseball Retainer

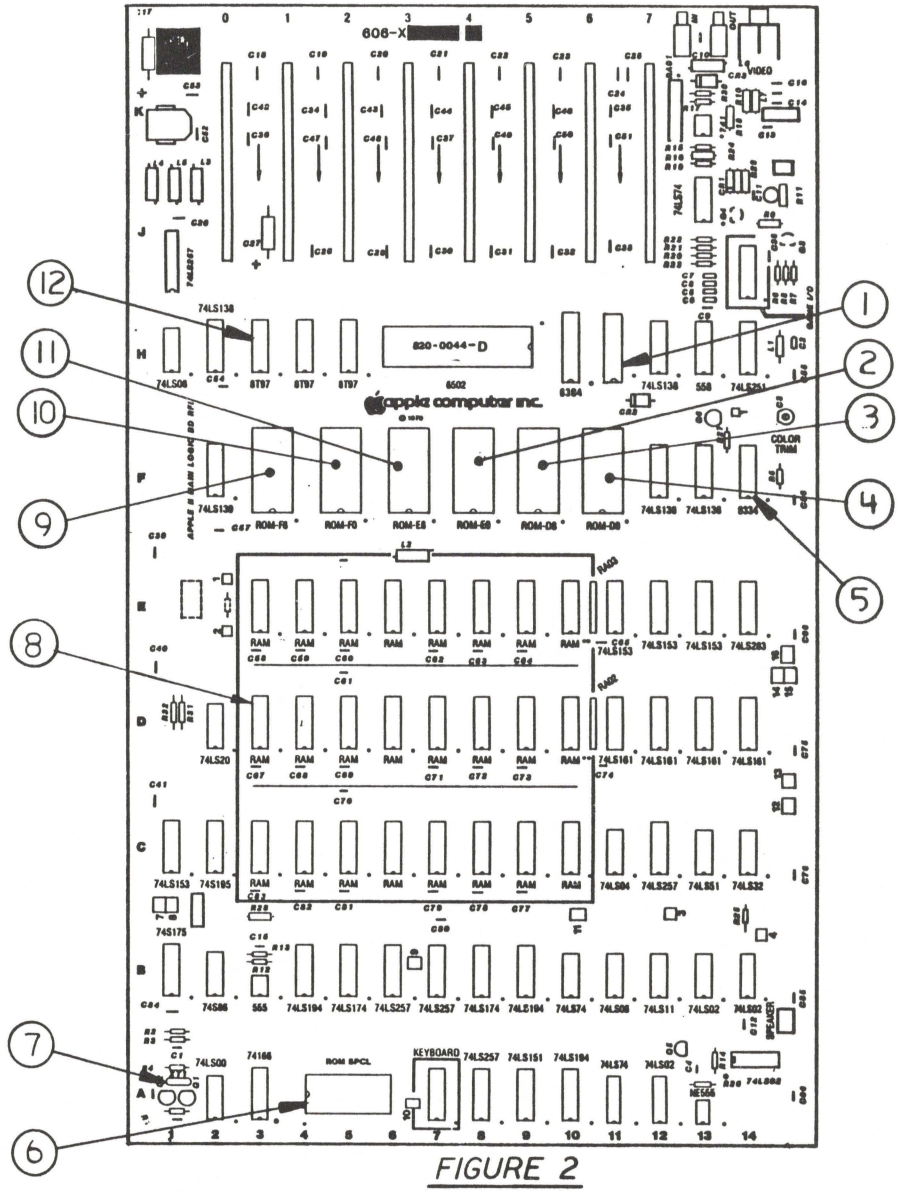

FIGURE 2

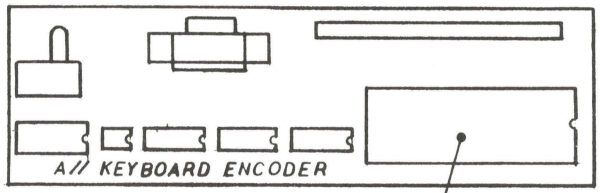

FIGURE 4

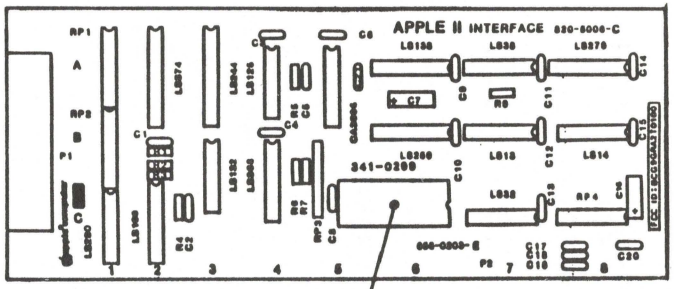

FIGURE 3

APPLE II/II+ (Figure 2)

Item	Part No.	Description
1	315-0828	IC, TTL, 8T28, 3 STAT (on early AII Board)
2	341-0001	ROM 16K EO (Integer)
	341-0013	ROM 16K-1AS-EO (Applesoft)
3	341-0012	ROM 16K-1AS-D8 (Applesoft)
4	341-0016	ROM 16K-DO (Integer)
	341-0011	ROM 16K-1AS-DO (Applesoft)
5	302-9334	IC, 9334
6	341-0036	ROM, SPCL
7	197-0001	Crystal, 14.318630 MHz
8	600-0361	Tube of 16K RAM (25 IC/Tube)
9	341-0004	ROM 16K F8 (Integer)
	342-0020	ROM Autostart F8 (Applesoft)
10	341-0003	ROM 16K F0 (Integer)
	341-0015	ROM-16K-1AS-FO (Applesoft)
11	341-0002	ROM 16K E8 (Integer)
	341-0014	ROM 16K-1AS-E8 (Applesoft)
12	315-0897	IC, TTL, 8T97, HI SP Hex 3-Stat Buffer

APPLE II/II+ (Figure 3)

1	341-0299	IC EPROM X-Meg ProFile Interface

APPLE II/II+ (Figure 4)

1	331-0931	IC Keyboard Encoder

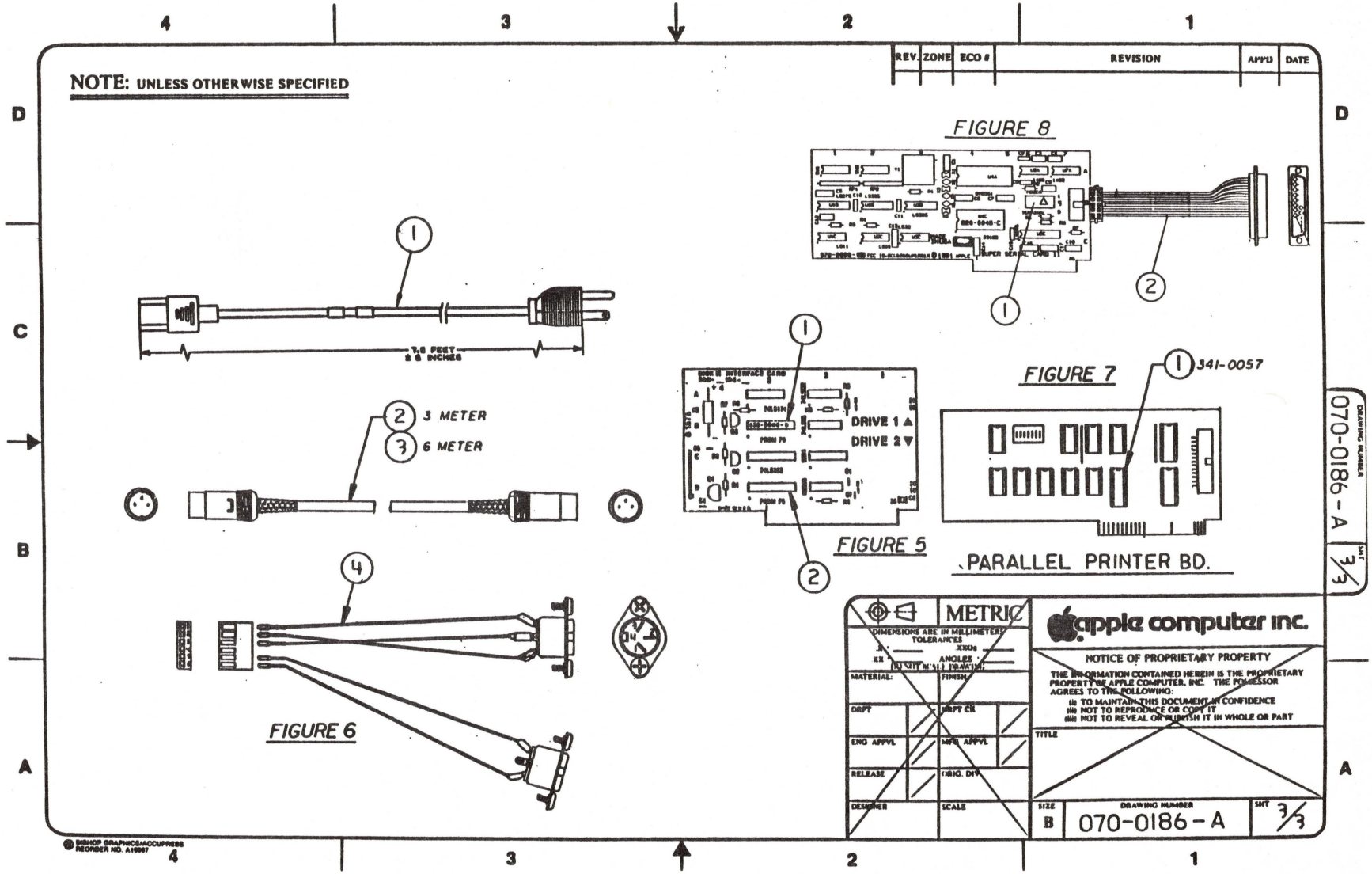
NOTE: UNLESS OTHERWISE SPECIFIED
REV. ZONE ECO # REVISION APPD DATE
FIGURE 8
1
2
FIGURE 7
1 341-0057
PARALLEL PRINTER BD.
1
2
DRIVE 1
DRIVE 2
FIGURE 5
1
7.0 FEET ± 6 INCHES
2 3 METER
3 6 METER
4
FIGURE 6
METRIC
DIMENSIONS ARE IN MILLIMETERS
TOLERANCES
MATERIAL:
FINISH:
DRFT
DRFT CK
ENG APPVL
MFG APPVL
RELEASE
DESIGNER
SCALE
apple computer inc.
NOTICE OF PROPRIETARY PROPERTY
THE INFORMATION CONTAINED HEREIN IS THE PROPRIETARY PROPERTY OF APPLE COMPUTER, INC. THE POSSESSOR AGREES TO THE FOLLOWING:
TO MAINTAIN THIS DOCUMENT IN CONFIDENCE
NOT TO REPRODUCE OR COPY IT
NOT TO REVEAL OR PUBLISH IT IN WHOLE OR PART
TITLE
SIZE B
DRAWING NUMBER 070-0186-A
SHT 3/3
070-0186-A
SHT 3/3

APPLE II/II+ (Figure 5)

Item	Part No.	Description
1	341-0028	IC, PROM STATE MACHINE P6A
2	341-0027	IC, PROM, P5A

APPLE II/II+ (Figure 6)

1	590-0003	Power Cable, AC
2	590-0127	School Bus External Cable (3 meter)
3	590-0133	School Bus External Cable (6 meter)
4	590-0126	School Bus Internal Cable

APPLE II/II+ (Figure 7)

1	341-0057	ROM, Parallel Printer Boards

APPLE II/II+ (Figure 8)

1	600-0008	Configuration Block SSC
2	590-0021	Cable Assy Super Serial

REV.	ZONE	ECO #	REVISION	APPD	DATE

NOTE: UNLESS OTHERWISE SPECIFIED

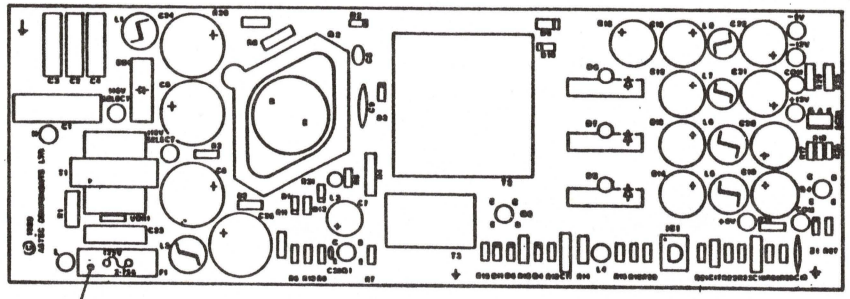

FIGURE 9
POWER SUPPLY

DRAWING NUMBER 070 0186 A SHT 4/4

METRIC	apple computer inc.
DIMENSIONS ARE IN MILLIMETERS TOLERANCES .X ± .XXo .XX ± ANGLES ± (IF NOT SCALE DRAWING)	NOTICE OF PROPRIETARY PROPERTY THE INFORMATION CONTAINED HEREIN IS THE PROPRIETARY PROPERTY OF APPLE COMPUTER, INC. THE POSSESSOR AGREES TO THE FOLLOWING: (i) TO MAINTAIN THIS DOCUMENT IN CONFIDENCE (ii) NOT TO REPRODUCE OR COPY IT (iii) NOT TO REVEAL OR PUBLISH IT IN WHOLE OR PART
MATERIAL:	FINISH:
DRFT 6/85	DRFT CK
ENG APPVL	MFG APPVL
RELEASE	ORIG. DIV SERVICE
DESIGNER	SCALE N/A
TITLE ILLUSTRATED PARTS LIST A//, A//+	
SIZE B	DRAWING NUMBER 070-0186-A SHT 4/4

© BISHOP GRAPHICS/ACCUPRESS REORDER NO. A10097

APPLE II/II+ (Figure 9)

Item	Part No.	Description
1	740-0001	Fuse, Power Supply, 1 amp 250V

The following keyswitches are illustrated in the Apple II product section, Appendix A:

705-0015	Alps Short Stem Keyswitch
705-0070	Alps Long Stem Keyswitch
815-0772	Straight Adapter

Apple II Technical Procedures

Appendix A

Keyboard and Keyswitch Replacement

There are two basic types of keyboards for the Apple II: the Datanetics and the Alps. Among the Alps keyboards, there are two types: long stem and short stem. Only the Alps long stem keyboard is currently supported by Apple Computer.

The following procedure will identify Apple II keyboards. If you only want to identify a keyswitch, go to Figure 2, page A.3. To replace a keyswitch, go to section 3 of "You Oughta Know".

To Identify a Datanetics or Alps Keyboard

1. To identify a keyboard, expose a keyswitch by **carefully** prying off a keycap with a screwdriver or knife blade.

2. Before identifying the keyswitches, here are some important distinguishing features you should know: a) Only Alps short stem keyswitches have adapters, small plastic pieces that fit on the stem to make it longer. b) Alps long stem keyswitches are capped directly with the keycap. c) Datanetics keyswitches have a square collar on the middle of the stem. Refer to Figure 1 below for the differences between the Apple II keyswitches.

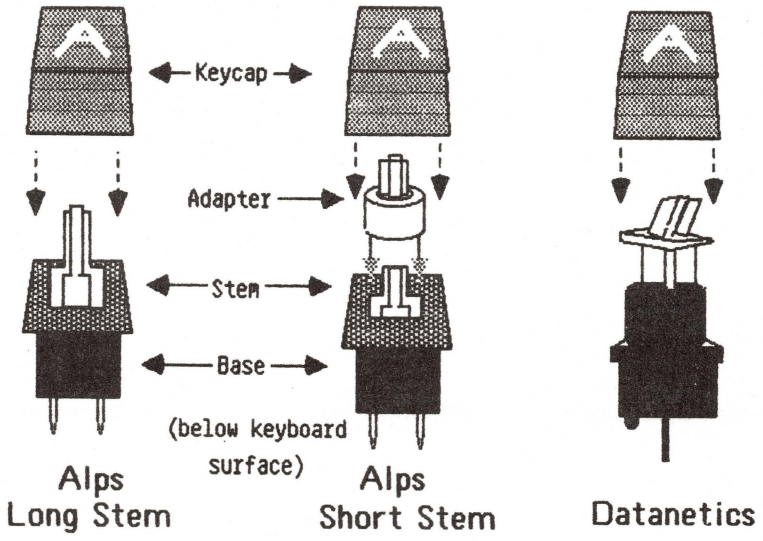

FIGURE 1

3. Now find the keyswitch on Figure 2 (page A.3). Then find the service part number of the appropriate keyboard in the right hand side of the table.

4. If you cannot identify the keyswitch using Figures 1 and 2, then remove the keyboard and look for the name "Datanetics" on the PCB.*

   - o If you locate the word "Datanetics" on the PCB, replace the keyboard with an Alps long stem.
   - o If you do not locate the word "Datanetics" on the PCB, then go to step 5.

5. Check to see if you find an adapter on the keyswitch. If there is an adapter, then the keyboard is an Alps short stem. If there is not an adapter, then the keyboard is an Alps long stem. Verify this by checking Figure 1, page A.2.

* Datanetics keyboards and keyswitches are no longer supported and replacement parts can no longer be ordered.

FIGURE 2: Apple II

Keyswitch	Keyboard
A. Alps Long Stem 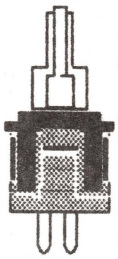 705–0070 Alps Long Stem ("Extended")	Service Part Number of Keyboard: 661–91073
B. Alps Short Stem  Adapter 705–0015 Alps Short Stem (Uses adapter 815-0182 with non-sculptured keycaps; uses adapter 815-0772 with sculptured keycaps) 815–0182  12° adapter used with short-stem keyswitches and non-sculptured keycaps 815–0772  Straight adapter used with short-stem keyswitches and sculptured keycaps (3–D View)	Service Part Number of Keyboard: * 661–74025 * 661–91021 * 661–91075
C. Datanetics  Keyswitch (Obsolete) 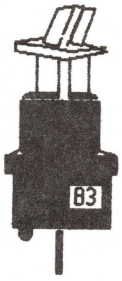 Reset (Obsolete)	Service Part Number of Keyboard: * 661–74024 * 661–91020

* These Keyboards are no longer available

Apple II Technical Procedures

Appendix B

Power Supply Switch Replacement

Contents:

Introduction.....B.3
Requirements.....B.5
Procedures.....B.7
Checklist.....B.15

INTRODUCTION

NOTE: These procedures are for gold-case power supplies only. Do not attempt to repair silver-case power supplies; replace them with gold-case power supplies.

If an Apple II cannot be turned on (or off), the most probable cause is a power supply problem. You can test this by substituting a known-good power supply in the customer's Apple II; if the problem disappears, you have isolated it to the customer's power supply.

The most common cause of power supply problems is the switch. If the switch cannot be moved, or if it offers no resistance to movement, the switch is probably causing the problem. While you are replacing the switch, you can also check the fuse. The switch and fuse are the only Level 1 replaceable components.

For a summary of the procedures, see p. B.15.

WARNING: Power supplies store dangerous high voltages and should always be disconnected before being serviced. Even after they are disconnected, power supplies may hold a dangerous voltage. **ALWAYS EXERCISE CAUTION IN REPAIRING POWER SUPPLIES: NEVER PROBE INSIDE A POWER SUPPLY UNNECESSARILY.**

NOTE: This repair is optional at Level 1. With the reduction in the price of the power supply exchange module, it may be more economical, depending upon your equipment and experience, to swap out defective power supplies.

Older model silver-case power supplies lack self-discharging circuits and should not be repaired in any case; always exchange them for gold-case supplies.

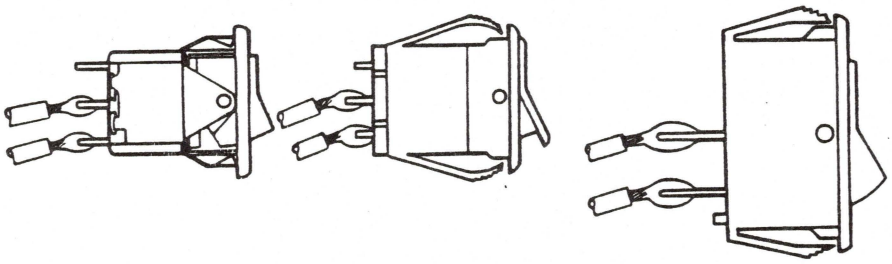

Item 1 Item 2 Item 3

FIGURE 1

REQUIREMENTS

A. Tools:

1. Soldering iron (25 watt) and 63/37 rosin-core solder
2. Needlenose pliers
3. X-acto knife
4. Four-inch diagonal cutters ("dikes")
5. Heat gun
6. Wire stripper (preferably automatic)
7. Pencil eraser
8. Hemostats
9. Portable power drill, with approx. 13/64 inch (.2" or 5mm) diameter bit
10. Vise large enough to hold power supply
11. Safety goggles
12. 1/8 inch center punch or 16-penny nail
13. Hammer
14. Small or medium Phillips screwdriver
15. Small flatblade screwdriver
16. Insulated fuse-puller or equivalent

B. Replacement material and components:

Fuse, 1 AMP, 250 Volt

For power supplies with a large, two-terminal switch,

1. **Switch, Power Supply, Rocker, Two Pole (Figure 1, switch A)**
2. Shrink tubing, 1/4 inch internal diameter

For those with small, three-terminal switch,

1. **Switch, Power Supply, Rocker, Three Pole (Figure 1, switch B)**
2. Shrink tubing, 1/8 inch internal diameter

[See Figure 1 for the three types of switch usually found in Apple II power supplies. The small, three-pole switch **(Figure 1, switch B)** is now obsolete and should be replaced with a new **Switch, P.S., Three Pole (Figure 1, switch C).** The large, **two-pole rocker switch, (Figure 1, switch A)** must be replaced by another **two pole, rocker switch, (Figure 1, switch A).**]

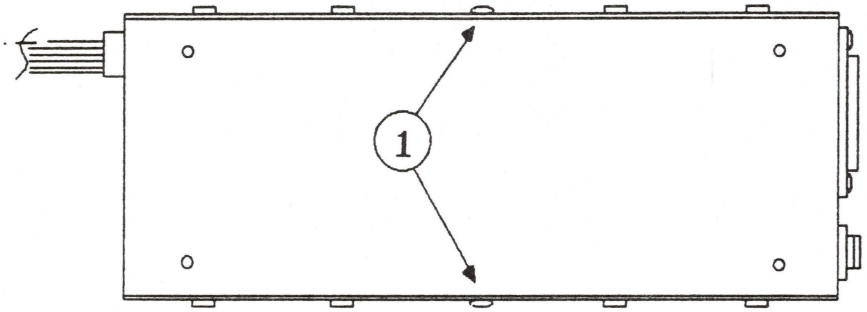

Figure 2

Bottom View of Power Supply

PROCEDURES

0. **BEFORE YOU DO ANYTHING ELSE,** take two 3/4 inch pieces of shrink tubing (1/8 inch internal diameter if working with small switch, 1/4 inch i.d. for large switch), and place or tape them onto the new switch, so that you won't forget to install them before soldering the new switch to the power supply leads.

1. **REMOVE THE POWER SUPPLY FROM THE APPLE II**

   a. Power off the Apple II and disconnect the power cord from the power supply.

   b. Unplug the power supply from the motherboard.

   c. Unscrew the power supply from the Apple II baseplate and carefully remove it from the Apple II.

2. **REMOVE THE COVER (BOTTOM PLATE) FROM THE POWER SUPPLY**

   NOTE: Some technicians prefer to pry the switch out of the case without removing the cover. If the switch is obviously bad and you choose not to open the case, go directly to step 3.

   a. Locate the two rivets that hold the bottom plate onto the power supply (Figure 2, #1).

   b. Clamp the power supply down firmly in the vise, so that one of the rivetted sides is facing up.

   c. Insert the 13/64 inch bit into the drill chuck and secure it. Put on safety goggles to protect your eyes from metal shavings.

   d. Position the drill bit in the center of the rivet, making sure the drill is aimed straight down into the rivet head. Holding it firmly so that it doesn't slip off the rivet, turn it on at a low speed and drill until the head of the rivet comes off. Do not drill all the way through the rivet or enlarge the hole in the case. Be careful not to scratch the case.

      NOTE: If the rivet is loose and turns with the drill, place the center punch in the hole in the rivet head and hit it with the hammer. This will spread the rivet head so it will grip the hole.

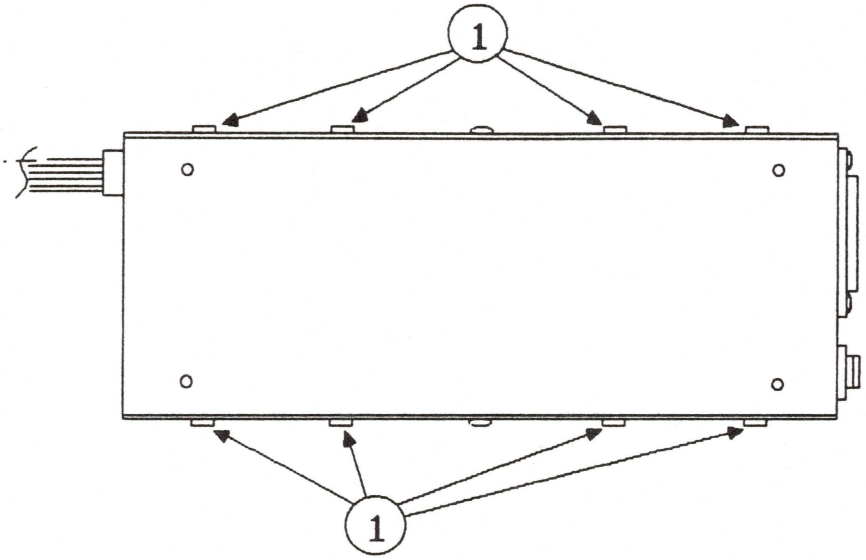

Figure 3

e. Hold the center punch on the rivet and hit it with the hammer until the rivet falls through into the case.

f. Repeat steps d and e for the rivet on the opposite side of the case. Remove the power supply from the vise.

g. Remove the eight screws (four on each side) that hold the bottom plate on (Figure 3, #1).

h. Pry up the bottom plate and set it aside. Be careful not to scratch the case.

i. Turn the power supply over and shake it to remove the rivet fragments. **MAKE SURE YOU FIND BOTH RIVETS.** If you can't find them, loosen (but do not remove) the screws that hold the p.c. board in place and shake until the rivets come out, but to avoid possible shock hazard, NEVER USE YOUR FINGERS TO PROBE INSIDE THE POWER SUPPLY; shake the rivets out of the case.

   If you loosen the PCB screws, be sure to retighten them afterwards.

j. Check the fuse (located near the switch and the power cord plug; usually marked F1 on the p.c. board). If it has blown, use an insulated fuse puller, machinist's scribe or other **INSULATED** tool to pry up one end; then you can remove it with your fingers. (Handle it by its metal ends.) Replace it with another fuse (1 Amp, 250 Volt) and test the power supply on a known-good system. If the second fuse blows also, do not attempt further repair. Replace the power supply with an exchange module and send the defective power supply back to Apple.

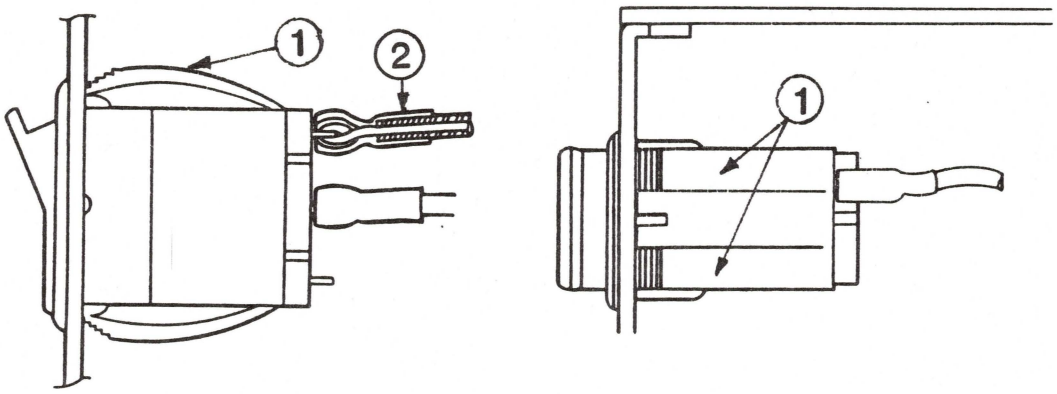

(a) SIDE VIEW (b) TOP VIEW

FIGURE 4

3. REMOVE THE OLD SWITCH

a. **If you have removed the cover,** clip off the two locking tabs (Figure 4, #1) on top of the switch (use diagonal cutters); then push the switch out with your fingers. (If that doesn't work, push the lower locking tabs out of the way with a screwdriver and try pushing again.)

   If you left the cover on, pry the switch out of the case (use screwdriver, assisted by needlenose pliers). Take care not to scratch the case.

b. Strip the shrink tubing (Figure 4a, #2) off the leads (i.e., wires) (use X-acto knife), taking care not to damage the insulation on the leads.

c. De-solder the leads from the switch terminals and discard the switch. (To de-solder, tin the soldering iron [i.e., put a drop of fresh solder on it] and heat the solder joint, while tugging on the switch with your free hand. When the solder melts, pull the lead free.)
   HINT: The leads are very short. If you are working with the cover on, a pair of hemostats, loosely clamped onto the leads, can simplify your job by keeping the leads steady and preventing them from falling back into the case.

4. CLEAN AND PREPARE THE LEADS

a. Clean excess solder from the leads (use soldering iron: either tap it off or draw it off onto the iron).

   NOTE: IF THE LEADS ARE VERY SHORT AND AWKWARD TO WORK WITH, REMOVE THE COVER FROM THE POWER SUPPLY, AS IN STEP 2 ABOVE. IF THEY ARE TOO SHORT TO CONNECT TO THE NEW SWITCH, REPLACE THE POWER SUPPLY.

b. Clip off any badly frayed part of the ends of the leads. (Cut off no more than necessary.)

c. Strip wires to obtain 1/4 inch of stripped wire on each lead. Twist ends to prevent fraying.

d. Tin the end of each lead.

FIGURE 5

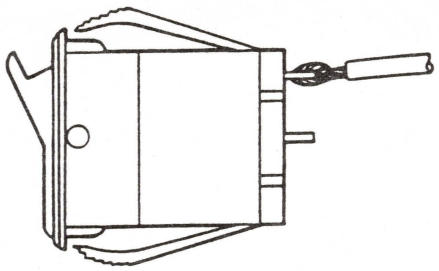

FIGURE 6

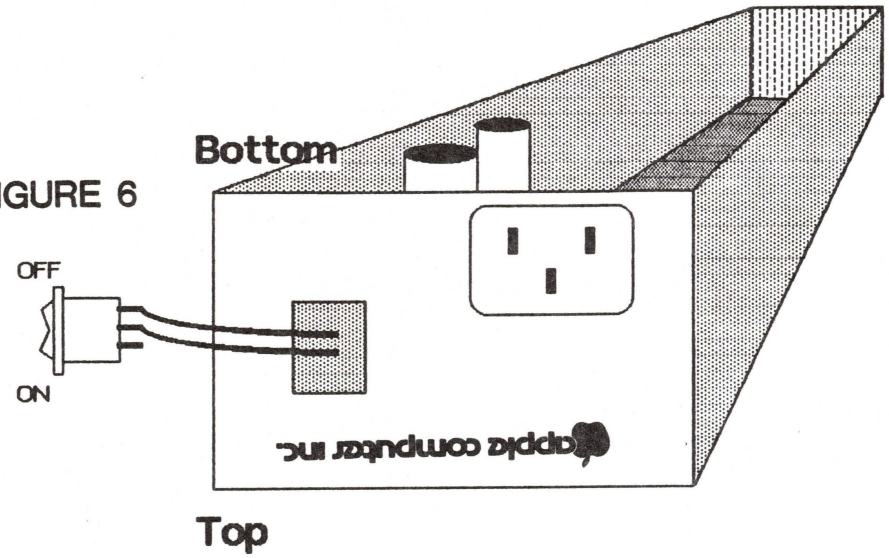

FIGURE 7

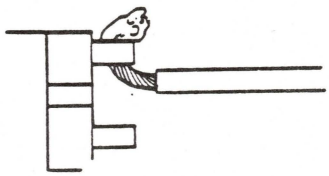

TOO LITTLE SOLDER ,
POOR MECHANICAL CONNECTION

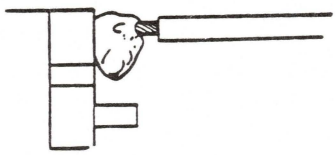

TOO MUCH SOLDER

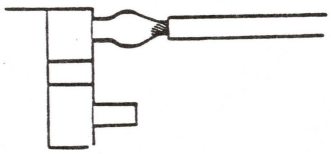

GOOD

e. **Slip a one-inch piece of heat-shrink tubing on each lead, and slide it back as far as possible (to prevent heat damage while you are soldering).**

f. Shape the end of each lead so that it will fit through the terminal of the new switch (use needlenose pliers).

5. INSTALL THE NEW SWITCH

a. **THREE-TERMINAL SWITCH:** Thread either lead through the hole in either outside terminal and crimp it with the pliers, so that the lead forms a loop around the end of the terminal (Figure 5). Attach the other lead to the middle terminal in the same way.

-- The open terminal will now mark the "ON" side. Orient it toward the top of the case. (See Figure 6. If you are working with the cover off, the case will be upside down.)

TWO-TERMINAL SWITCH: Clean the terminals of the switch with an eraser; then tin them. Then thread one lead through each terminal and crimp it with pliers, to form a loop around the end of the terminal as in Figure 5.

-- Make sure that "ON" (marked on the switch) is toward the top of the case. (If you are working with the cover off, the case will be upside down: see Figure 6.)

b. Solder the leads to the terminals. To avoid damaging the switch, do not apply the soldering iron to the switch for more than 20 seconds.

c. Check your solder joints. (See Figure 7 for examples of good and bad solder joints.)

d. After the solder has cooled, slip the shrink tubing down both leads, making sure that it covers both terminals completely and overlaps the insulation on the leads. Heat the tubing with the heat gun until it has shrunk to a tight covering around each terminal and lead.

e. Make sure the "ON" side of the switch (the open terminal of the three-terminal switch) is toward the top of the case, and push the switch into its slot in the case until it seats itself firmly. (See Figure 8.)

6. REPLACE THE COVER

a. If you removed the cover, turn over the power supply and shake it to remove loose objects, metal shavings, etc. Inspect visually for excess solder droplets, etc., and remove any you find. (A brush, vacuum or air gun might be helpful.)

b. Replace the cover and fasten it with the eight screws. DO NOT REPLACE THE RIVETS.

7. TEST THE REPAIR

a. Plug the repaired power supply into the motherboard of a known-good Apple II (NOT the customer's).

b. Make sure the power supply switch is set to "OFF". Connect the power cord to the power supply, then to the wall.

c. Turn on the power supply. If the power light goes on and the Apple II tries to boot, the repair was successful. Replace the power supply in the customer's Apple II and return the system to the customer.

If the repair was not successful, swap power supplies for the customer and send the customer's power supply to Regional Service Center.

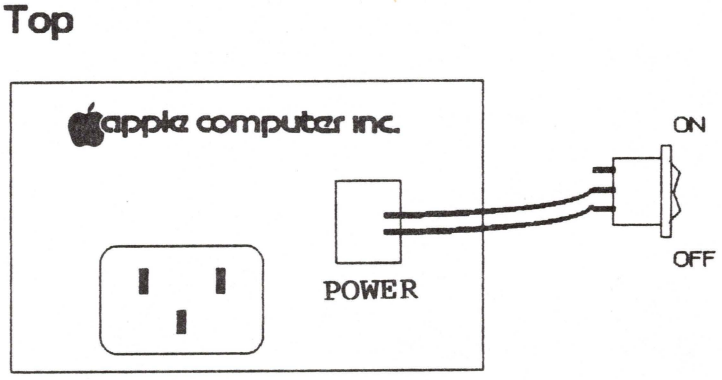

FIGURE 8

CHECKLIST

Use this checklist as an on-the-job reminder. For detailed explanations of any steps, refer to the procedures on the preceding pages.

1. Equipment ready?

    a. Switch
    b. Medium flatblade screwdriver
    c. Needlenose pliers
    d. X-acto knife
    e. Four-inch diagonal cutters ("dikes")
    f. Heat gun
    g. Shrink tubing
    h. Wire stripper (preferably automatic)
    i. Soldering iron (25 watt) and 63/37 rosin-core solder
    j. Hemostats
    k. Small or medium Phillips screwdriver
    l. Drill with 13/64 inch (5mm) bit
    m. Safety goggles
    n. Center punch or 16-penny nail
    o. Hammer
    p. Eraser
    q. Fuse-pulling tool (insulated)
    r. Fuse

2. Remove power supply.

3. Open case and check fuse. (Optional)

4. Pry out switch.

5. De-solder and prepare leads.

6. **Put shrink tubing on leads.**

7. Solder leads to new switch. (See Figure 8 for orientation of 3-pole switch.)

8. **Position shrink tubing over solder joints and apply heat.**

9. Pop switch in.

10. Shake out case (if open).

11. Replace cover; **do not replace rivets.**

12. **Test on Apple II (NOT THE CUSTOMER'S).**

End of Apple ii/ii+ section
start of Apple iii/iii+ section

APPLE /// and APPLE /// PLUS TECHNICAL PROCEDURES

TABLE OF CONTENTS

Section 0 - Apple /// Service Notes

Memory and Logic Board Exchanges
- Automatic Upgrades.....0.4
- Returning Logic Boards: Removing Video Interlace ROM.0.4
- Installing Logic Boards: Removing Foam.....0.4

Power Supply Cables.....0.4

Section 1 - Take-Apart Procedures

Removing the Cover.....1.3
Replacing the Cover.....1.3
Removing the Analog Board.....1.5
Replacing the Analog Board.....1.7
Removing the Disk Assembly.....1.9
Replacing the Disk Assembly.....1.9
Removing the Keyboard.....1.11
Replacing the Keyboard.....1.11
Removing the Power Supply.....1.13
Replacing the Power Supply.....1.13
Removing the Main Logic Assembly.....1.15
Replacing the Main Logic Assembly.....1.17

Section 2 - Apple /// Diagnostics (Apple /// Only)

Diagnostics Setup.....2.3
Diagnostics Menu.....2.3
Making Test Diskettes.....2.4
Test All.....2.5
Video Tests.....2.5
Sound Tests.....2.7
Disk Test.....2.7
Keyboard Tests.....2.8
ROM Test.....2.9
RAM - 5V and RAM - 12V Tests.....2.9

©Apple Computer, Inc., 1985, 1986.
No part of this document may be reproduced in any form without the written permission of Apple Computer, Inc.

Apple and the Apple logo are registered trademarks of Apple Computer, Inc.

Section 3 - Troubleshooting

Using the Diagnostic Flowchart.....3.3
Lettered Boxes of the Flowchart.....3.4
ProFile Problems with the Apple ///.....3.9

Section 4 - Modifications

Installing the Apple /// Clock Kit.....4.3
Setting the Apple /// Time.....4.4
Adjusting the Apple /// Clock Speed.....4.5

Section 5 - Apple /// Plus Diagnostics (Apple /// Plus Only)

Introduction.....5.3
Diagnostics Setup.....5.3
Diagnostics Menu.....5.3
Make Test Disks (Diskettes).....5.4
RAM Test.....5.5
ROM Test.....5.6
Calender/Clock Test.....5.6
Disk Test.....5.6
Keyboard Tests.....5.7
Sound Tests.....5.9
Video Tests.....5.10
Test All.....5.13

Section 6 - Illustrated Parts List

Finished Goods Assembly.....6.3
Universal Parallel Printer Boards.....6.5
Logic Board.....6.5
Memory Board.....6.5

Appendix A

Apple /// Keyboard/Keyswitch Identification.....A.1

NOTE: These Technical Procedures apply to both the Apple /// and Apple /// Plus (unless otherwise noted).

Apple /// Technical Procedures

Section 0

Apple /// Service Notes

Contents:

Memory and Logic Board Exchanges
  Automatic Upgrades..... 0.4
  Returning Logic Boards: Removing Video Interlace ROM....0.4
  Installing Logic Boards: Removing Foam.....0.4
Power Supply Cables.....0.4

APPLE /// MEMORY AND LOGIC BOARD EXCHANGES

Automatic Upgrades

The 256K 5V Memory Board and the 5V Apple /// Logic Board are the only mdules now available from Apple for purchase or exchange.

Because of this:

- All Apple 12V systems and 128K 5V systems will be upgraded to 256K 5V systems for a nominal charge when a Memory Board or a 12V Logic Board fails.

- If one board in a 12V system fails, both boards (Logic and Memory) will have to be replaced.

IMPORTANT: All 5V Memory Boards are to be returned WITH RAM. The exchange modules come fully stuffed with 256K of RAM.

Returning Logic Boards: Removing Video Interlace ROM

Before returning an Apple /// Logic Board for exchange, you must remove and keep the video interlace ROM (if present). The ROM (P/N 342-0145) is at location F5 on the Logic Board. The exchange board will not include this ROM.

Installing Logic Boards: Removing Foam

The Apple /// Logic Board is shipped with a piece of black foam taped to the bottom of the board to protect the encoder chip. Be sure to remove the black foam before installing the Logic Board. Failure to do so can cause damage to the encoder chip and/or the Logic Board.

POWER SUPPLY CABLES

There are two types of power supply cable connectors: one has two rows of four pins, and the other has one row of ten pins. Check which type of connector is on the logic board before ordering the cable. The one row with ten pins requires the part listed as **Cable, Power Supply to Apple /// Logic Board.** The two rows with four pins requires the part listed as **Cable, Power Supply RFI Apple /// Plus.**

Apple /// Technical Procedures

Section 1

Take-Apart

Contents:

Removing the Cover.....1.3
Replacing the Cover.....1.3
Removing the Analog Board.....1.5
Replacing the Analog Board.....1.7
Removing the Disk Assembly.....1.9
Replacing the Disk Assembly.....1.9
Removing the Keyboard.....1.11
Replacing the Keyboard.....1.11
Removing the Power Supply.....1.13
Replacing the Power Supply.....1.13
Removing the Main Logic Assembly.....1.15
Replacing the Main Logic Assembly.....1.17

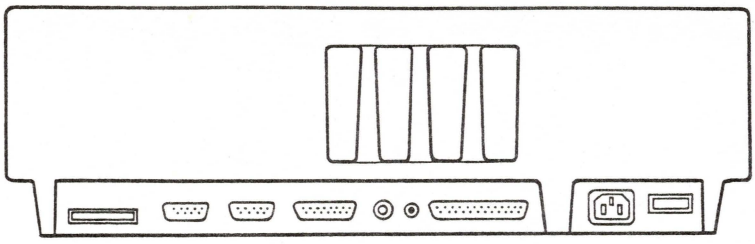

FIGURE 1

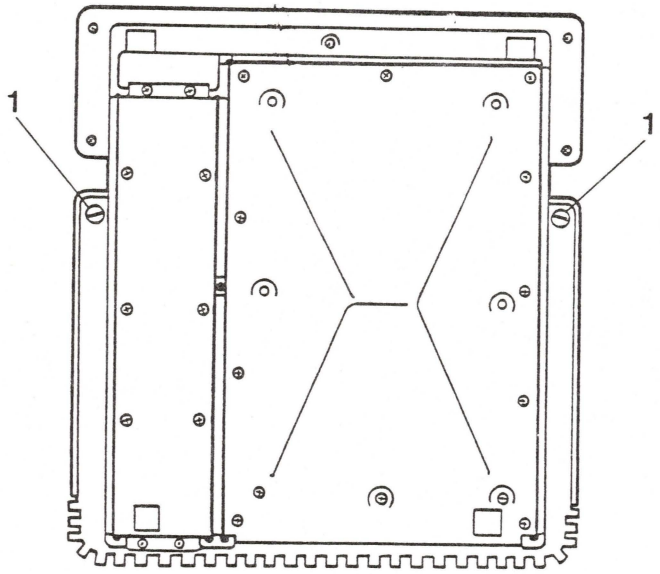

FIGURE 2

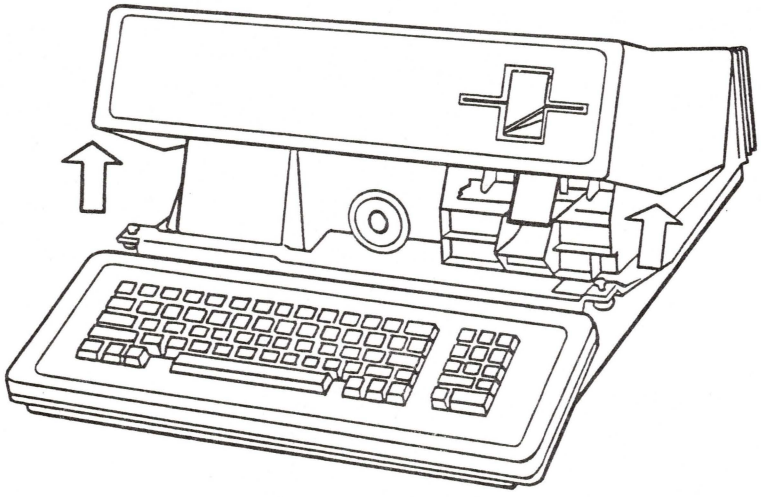

FIGURE 3

A. REMOVING THE COVER

1. Power down and disconnect the AC power cord from the source and then from the back of the Apple ///.

2. Disconnect all other external cables from the back of the Apple ///. (See Figure 1).

3. Lift up the front edge of the Apple and tip it up so it rests on the back of the casing.

4. Use a flat blade screwdriver to turn the locking screws, one on each side of the Apple III, 1/4 turn counterclockwise. (See Figure 2, Item 1).

   DO NOT REMOVE THESE SCREWS--they are self-capturing and are supposed to stay in.

5. Lower the Apple /// to the operating position and with a hand on each side, lift the cover up and pull it forward to remove it. (See Figure 3).

B. REPLACING THE COVER

1. With the Apple /// in operating position, place the cover on making sure that it is seated properly all the way around. Be sure that the four tabs on the back of the cover fit into the four slots in the back of the Apple.

2. Tip up the front edge of the Apple and tighten the two locking screws by turning them 1/4 turn clockwise.

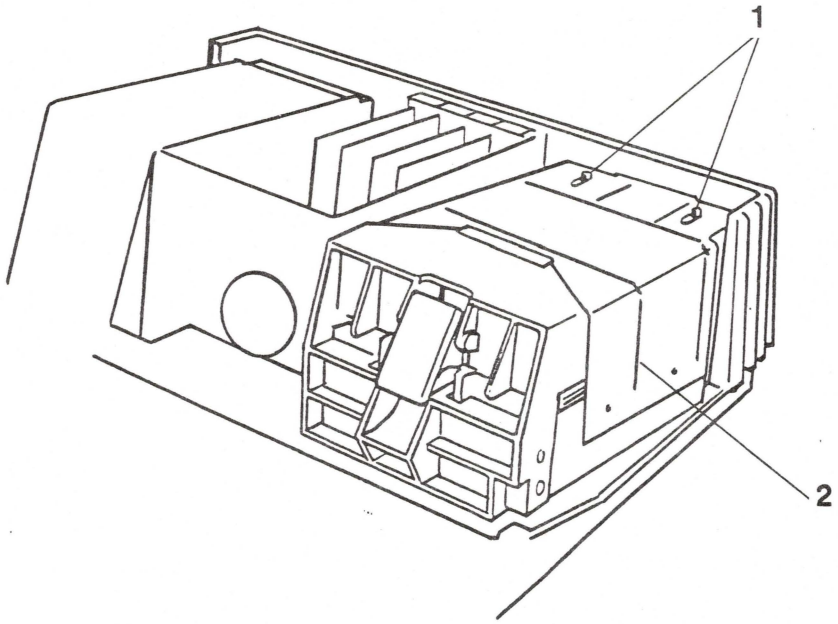

FIGURE 4

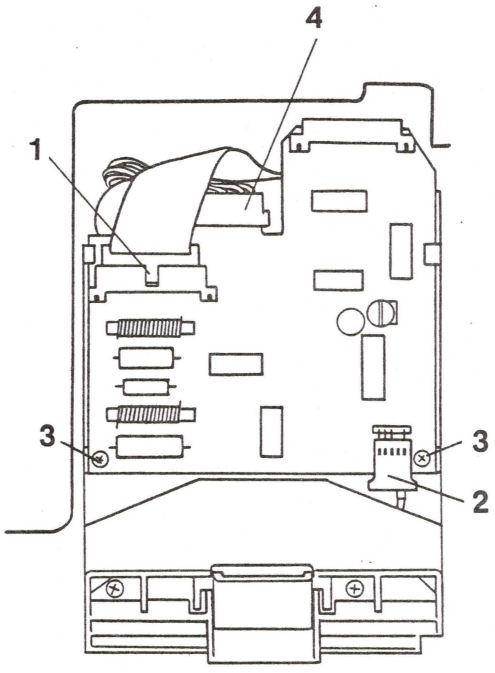

FIGURE 5

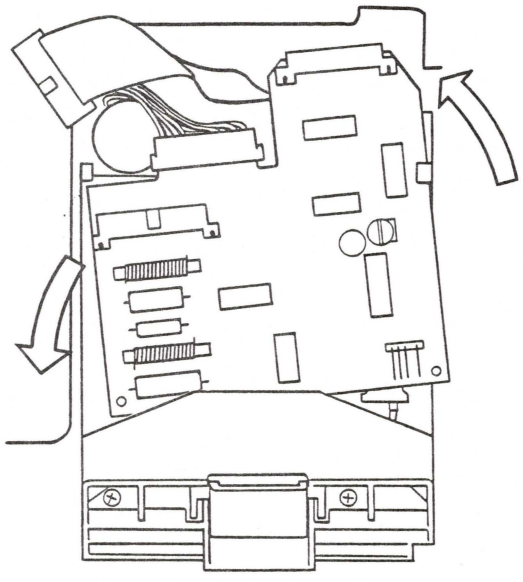

FIGURE 6

C. REMOVING THE ANALOG BOARD

1. Remove the cover.

2. To get to the analog board you must first remove the disk assembly shield. To do this, use a flat blade screwdriver to slide the two Tinnerman retaining clips on the disk assembly shield forward. (See Figure 4, Item 1).

   NOTE: The clips should come off easily. However, they sometimes fly so you should keep a finger on them.

3. Remove the disk assembly shield by flexing the side out (See Figure 4, Item 2) and lifting up on the shield.

   The shield is only retained by the spring tension of the sides and four dimples which fit into depressions of the disk casting.

4. Disconnect the disk ribbon cable. If it is hard to remove, work it off by pushing on the center tab or the sides of the plug with a small screwdriver. DO NOT PULL IT OUT BY THE CABLE! (See Figure 5, Item 1).

5. Disconnect the read/write head cable. (See Figure 5, Item 2).

   NOTE: Do not try to remove the motor control cable yet. (see Figure 5, item 4).

6. Remove the two small Phillips head mounting screws which hold the analog board at the front of the casting. (See Figure 5, Item 3).

7. Remove the analog board by gently twisting it counterclockwise and moving it forward until it clears the guide on the left. Unhook it from the guide on the right. (See Figure 6).

8. Remove the motor control plug (Figure 5, Item 4) by disengaging the four nylon locking pawls which engage the two holes in the board from both top and bottom. Lift the pawls free and disconnect the motor control cable.

D. REPLACING THE ANALOG BOARD

1. Connect the motor plug. Make sure the nylon pawls are engaged in the holes.

2. Turn the board slightly counterclockwise and hook the board under the right retainer and then the left retainer.

3. Replace the two screws in front.

4. Replace the disk ribbon cable.

5. Replace the read/write head cable.

6. Replace the disk assembly shield.

7. Replace the Tinnerman clips by putting them over the posts and sliding them back. Use a screwdriver to press down firmly on the sides of the clips to secure them.

8. Replace the cover.

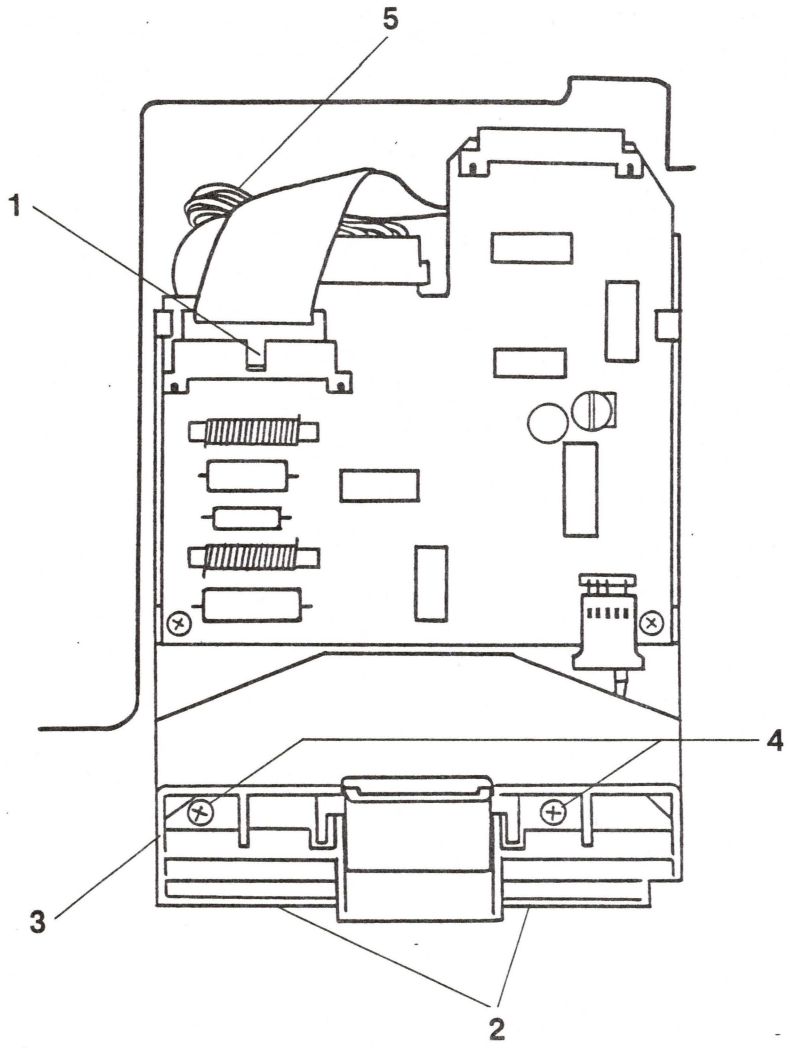

FIGURE 7

E. REMOVING THE DISK ASSEMBLY

1. Remove the cover.

2. Remove the Analog card.

3. Draw a pencil line on the Apple III chassis along the front (See Figure 7, Item 2) and left side (Figure 7, Item 3) of the disk assembly bezel. This will serve as a location reference when the disk assembly is re-inserted.

4. Loosen completely (but don't remove yet) the two Phillips head screws that mount the disk assembly to the Apple /// chassis. They can be seen by looking down through the front diskette guide and door assembly. (See Figure 7, Item 4).

5. Loosen but don't remove the screw in the double retaining clip that secures the back of the disk assembly. (See Figure 7, Item 5).

6. Remove the assembly by sliding it forward until it clears the retaining clip. Lift it from the chassis.

7. Recover the two front screws from the disk assembly.

F. REPLACING THE DISK ASSEMBLY

1. Slip the disk assembly under the double retaining clip so that the front is in line with the pencil line you drew earlier.

2. Replace the two front screws.

3. Tighten the retaining clip screw in the back.

4. Replace the Analog card.

5. Replace the cover.

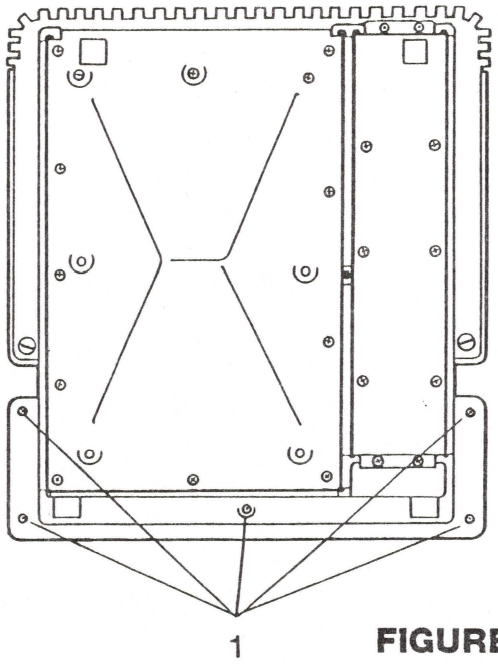

FIGURE 8

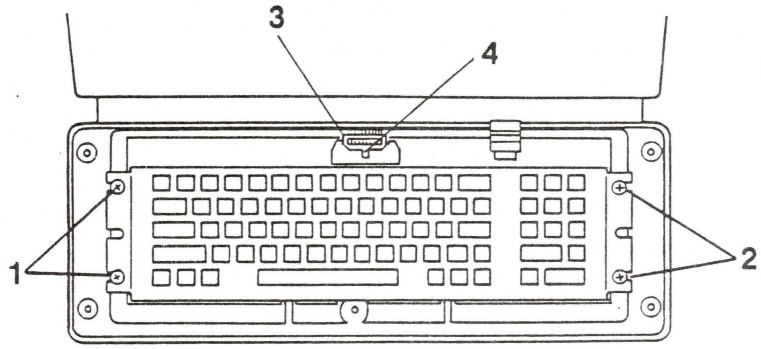

FIGURE 9

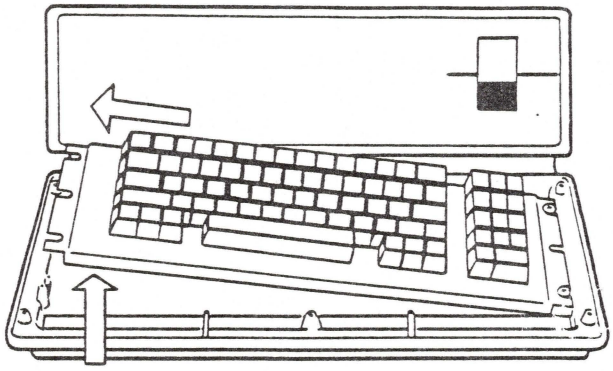

FIGURE 10

G. REMOVING THE KEYBOARD

1. Check to see that the power is off on the Apple /// and that the AC power cord is disconnected.

2. Turn the Apple completely over.

3. Remove the five keyboard cover mounting screws. (See Figure 8, Item 1).

4. Remove the keyboard cover.

5. Turn the Apple rightside up again.

6. Remove the two retaining screws on the left end of the keyboard. (See Figure 9, Item 1).

7. Loosen but don't remove the two retaining screws on the right. (See Figure 9, Item 2).

8. Remove the keyboard by lifting the left end and sliding the right end from under the loosened screws. (See Figure 10).

9. Disconnect the keyboard cable (See Figure 9, Item 3) by using a screwdriver to push on the tab or the sides of the cable connector (See Figure 9, Item 4).

   CAUTION: Do not pull on the cable!

H. REPLACING THE KEYBOARD

1. Replace the keyboard cable. Make sure it wraps tightly around the printed circuit board and does not stick out.

2. Replace the keyboard.

3. Replace the two retaining screws on the left end of the keyboard.

4. Tighten down the two screws on the right side of the keyboard.

5. Replace the keyboard cover.

6. Tip the Apple /// up, keeping one hand on the loose keyboard cover.

7. Carefully replace the five keyboard cover mounting screws. Don't overtighten them because they are just threaded into the plastic of the cover and will strip very easily.

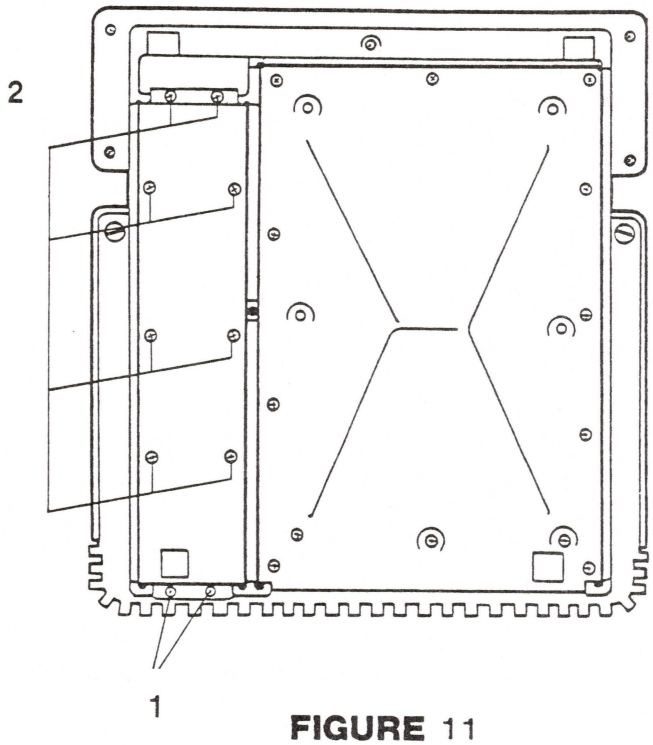

FIGURE 11

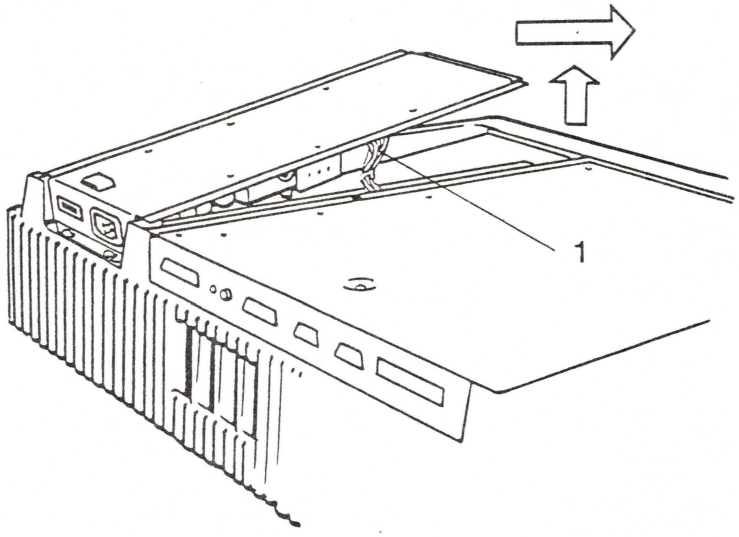

FIGURE 12

I. REMOVING THE POWER SUPPLY

1. Make sure that the power is off on the Apple /// and that the AC power and all other external cables are disconnected.

2. Turn the Apple upside down with the back facing you, putting it on a soft pad.

3. Loosen but don't remove the two Phillips head screws located on the rear edge of the power supply bottom cover, near the on/off switch and power supply receptacle. (See Figure 11, Item 1).

4. Completely loosen the eight screws that secure the power supply to the chassis. Do not try to take them out (See Figure 11, Item 2).

5. Lift up the edge of the power supply and slide it until it clears the two rear mounting screws. Lift the power supply out. (See Figure 12).

6. Turn the power supply over.

7. Disconnect the power supply connector by squeezing in on the tabs and gently (with a rocking motion) pull the connector out. (See Figure 12, Item 1).

8. If there is a wire tie holding the cable, clip it.

J. REPLACING THE POWER SUPPLY

1. Place a new wire tie on the cable.

2. Plug in the cable connector.

3. Replace the power supply. Slide the cover under the two rear screws and lower the power supply into place.

4. Tighten down all the screws. BE CAREFUL! DON'T FORCE THE SCREWS! If excessive force is applied, the screws will strip out the chassis. Make sure the screws are not crossthreaded. If one doesn't go in easily, back it out and try again.

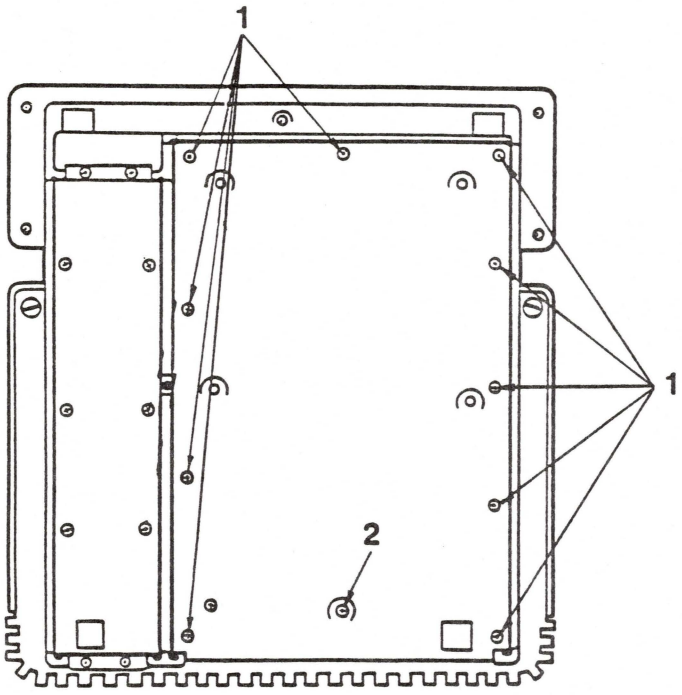

FIGURE 13

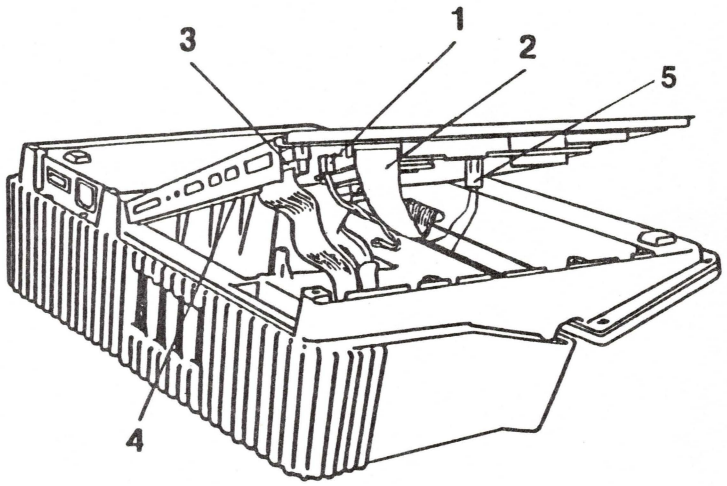

FIGURE 14

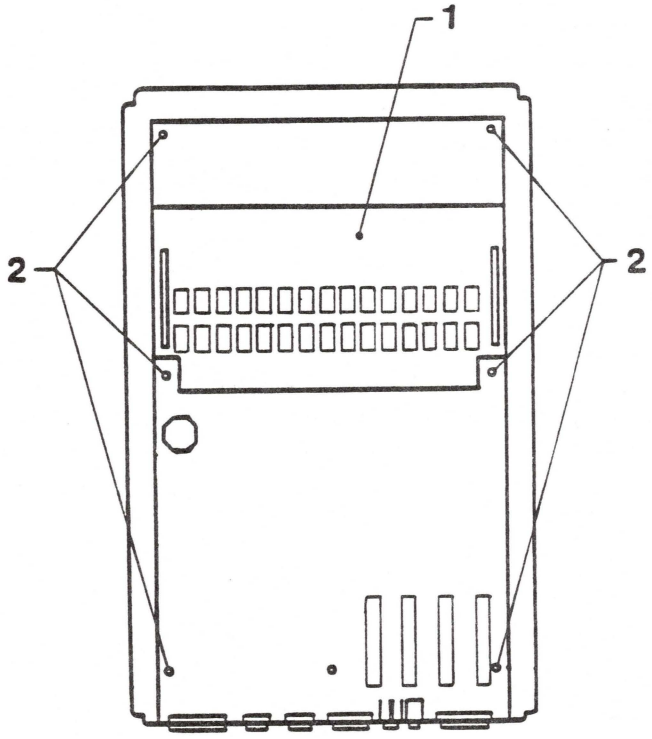

FIGURE 15

K. REMOVING THE MAIN LOGIC ASSEMBLY

1. Make sure that the power on the Apple is off and that all external cables are disconnected.

2. Tip the Apple /// on its side.

3. Loosen the two locking screws that hold the cover on.

4. Remove the cover.

5. Remove any peripheral cards installed in slots 1 - 4.

6. Put the Apple cover back on to protect the disk bezel.

7. Place the Apple upside down and put it on a pad with the rear facing you.

8. Remove the ten Phillips screws around the edge of the logic access panel. (See Figure 13, Item 1.)

9. Remove the additional recessed screw that is about one and a half inches in from the rear edge of the panel. (See Figure 13, Item 2).

10. Lift up the logic board carefully from the right side. Allow the panel to remain resting on its edge nearest the power supply. (See Figure 14.)

11. While holding the logic board on the underside, disconnect the clock/calendar cable, if present (Figure 14, Item 5) the speaker cable (Figure 14, Item 1), the keyboard cable (Figure 14, Item 2), and the disk drive cable (Figure 14, Item 3). Note which plug goes where.

    NOTE: The clock/calendar is optional on the Apple /// but standard on the Apple /// Plus.

12. Lift the assembly so that you can unplug the power supply plug. (Figure 14, Item 4).

13. Lift out the logic assembly.

14. Place the logic assembly flat on the work surface. Using both hands, lift off the memory board (See Figure 15, Item 1) from the main logic board (Motherboard).

    NOTE: Lift the memory board straight up so that the male connector pins mounted on the main logic board will not be bent or broken.

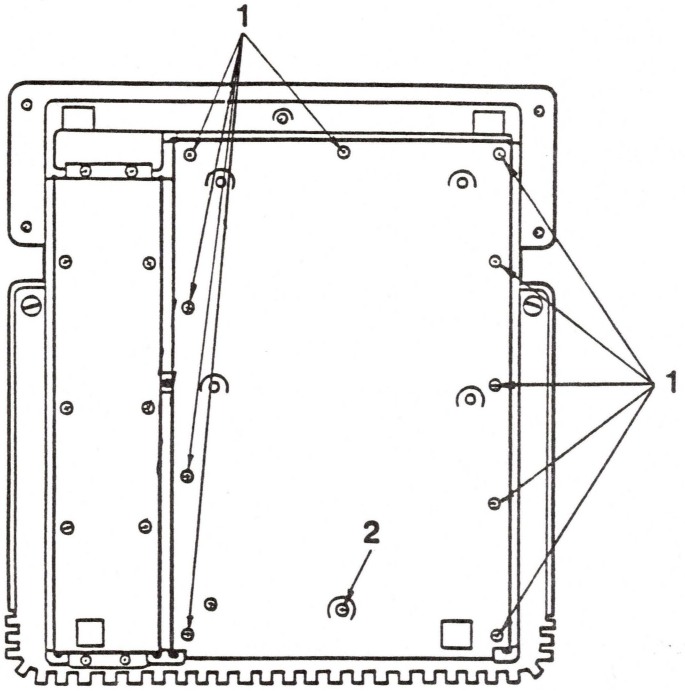

FIGURE 13

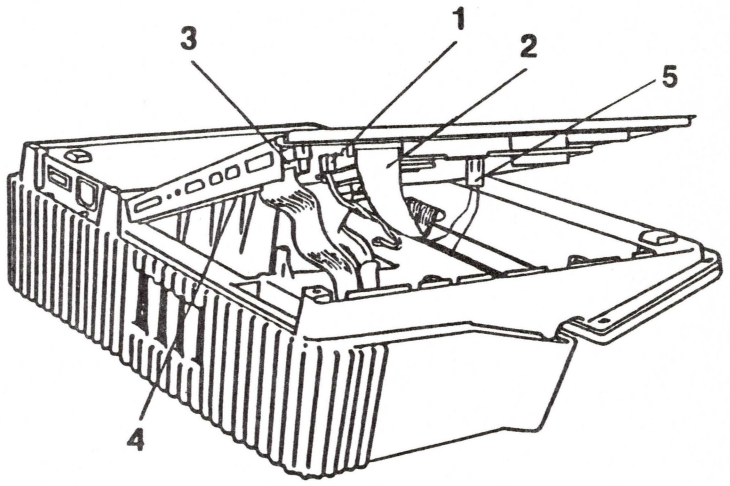

FIGURE 14

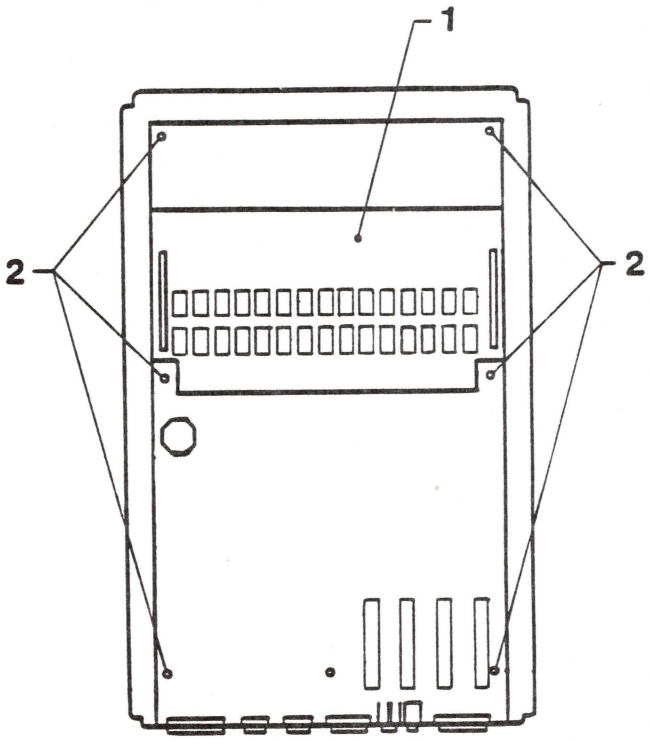

FIGURE 15

15. Remove the six retaining screws on the main logic board. (See Figure 15, Item 2).

16. Ease the main logic board forward so that the peripheral connectors slip out of their cutouts.

17. Remove the main logic board.

    NOTE: Be sure to remove the clock chip (location B3) and the battery adapter and clamp prior to returning the main logic board for exchange. Refer to "Installing the Apple /// Clock Kit" in **Section 4, Modifications,** for the location of these components.

L. REPLACING THE MAIN LOGIC ASSEMBLY

NOTE: See **Section 0, Apple /// Service Notes** for module exchange information.

1. Make sure that the insulating shield (present only on early models of the Apple ///) is in place to keep the board from shorting on the access panel.

2. Replace the main logic board by slipping the peripheral connectors into their cutouts in the rear access panel, and then replacing the retaining screws with the screwdriver (Figure 15, Item 2).

3. Replace the memory board (Figure 15, Item 1), making sure memory board is properly oriented. (The RAM chips on the memory board point in the opposite direction to the chips on the main logic board. The notches on the memory board IC's should be facing the output connectors.)

   Align the end pin in the end hole of the memory board and then tip the board flat. When all pins are properly started, press the board gently but firmly into place.

4. Rest the access panel on the power supply side and reach under and plug in the power supply (Figure 14, Item 4).

5. Plug in the speaker cable (Figure 14, Item 1).

6. Plug in the keyboard cable (Figure 14, Item 2).

7. Plug in the disk cable (Figure 14, Item 3).

8. Plug in clock/calendar cable, if present (Figure 14, Item 5).

9. Put the entire logic assembly panel in place and tighten down the 11 Phillips screws on the logic assembly access panel. (See Figure 13, Items 1 and 2).

10. Turn the Apple /// rightside up.

11. Remove the cover.

12. Replace the peripheral cards.

13. Replace the cover.

Apple /// Technical Procedures

Section 2

Diagnostics

Contents:

Diagnostics Setup..... 2.3
Diagnostics Menu.....2.3
Making Test Diskettes.....2.4
Test All.....2.5
Video Tests.....2.5
Sound Tests.....2.7
Disk Test.....2.7
Keyboard Tests.....2.8
ROM Test.....2.9
RAM - 5V and RAM - 12V Tests.....2.9

The Apple /// Dealer Diagnostics diskette (P/N 077-0013A) is to be used with the Troubleshooting Flowchart (below, section 3). This section describes how to run the tests on the diskette. Normally (see section D) you will use the TEST ALL option to run all the tests in sequence. If you wish to run or repeat an individual test, simply use the up- and down-arrow keys to select that test from the main menu and press RETURN to accept it.

FIGURE 1

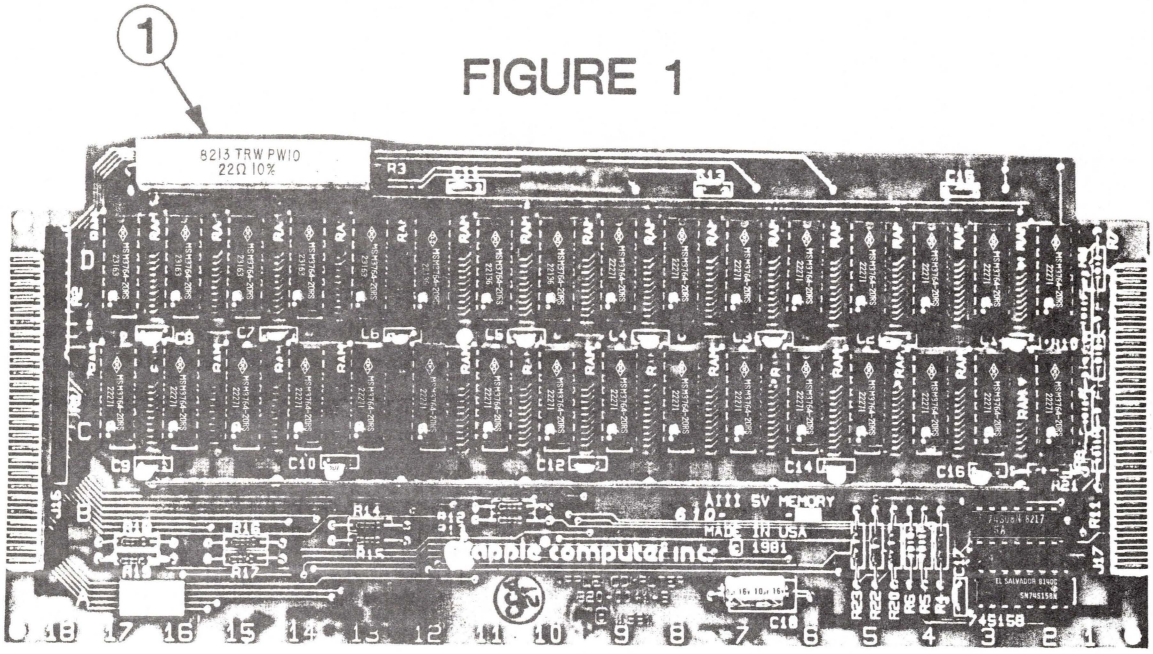

5V MEMORY BOARD

FIGURE 2

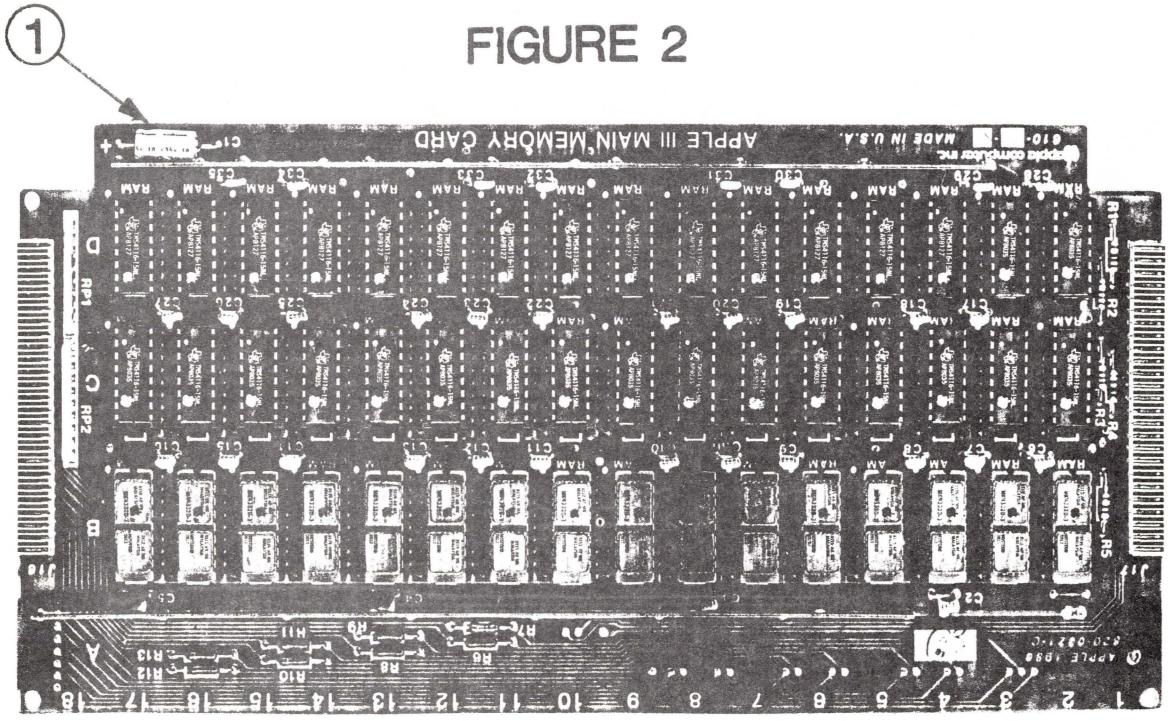

12V MEMORY BOARD

A. DIAGNOSTICS SETUP

NOTE: Before using the Diagnostic Diskette, make a backup by using the Device Handling Commands on the System Utilities diskette.

1. Determine whether the system under test has a 5-volt or a 12-volt memory board. (Early models of the Apple /// use a 12-volt memory board; later models use a 5-volt board. For the RAM tests (below, p.2.9), you need to know which style board is in the system under test.)

   a) Power down the Apple /// and remove the top cover.

   b) Look straight down through the main opening toward the front of the chassis. You will see the edge of the memory board projecting from under the keyboard, and on the left corner of the board you will see either a large grey ceramic resistor (5V board: Figure 1, #1), or a small blue tubular capacitor (12V board: Figure 2, #1).

   c) Write down which type board is in the Apple ///.

2. Replace the cover, and check to see that your Apple /// and associated peripherals are all properly connected.

3. Insert the diagnostics diskette into the internal disk drive and boot the system.

B. DIAGNOSTIC MENU

After you have successfully booted the diagnostic program, you will see the menu below displayed on the monitor screen.

```
                MAIN MENU
TEST ALL

VIDEO                       (NOT TESTED)
SOUND                       (NOT TESTED)
RAM TEST - 5V               (NOT TESTED)
DISK                        (NOT TESTED)
KEYBOARD                    (NOT TESTED)
ROM                         (NOT TESTED)

RAM TEST - 12V              (NOT TESTED)
MAKE TEST DISKS

PRESS:  UP/DOWN ARROWS TO SELECT TEST
        RETURN TO RUN TEST
PRESS:  ESC(APE) TO QUIT
```

NOTE: Because the Apple /// runs several internal diagnostics before booting, having come this far is a vote of confidence for correct system operation.

You will notice that TEST ALL is highlighted in inverse video. The inverse video indicates which test will be run when RETURN is pressed.

The UP/DOWN Arrows will move the inverse cursor line through the list of menu options one-by-one. Pressing RETURN will accept and run the highlighted menu option.

Pressing the ESCAPE key will exit the diagnostics program altogether.

C. MAKE TEST DISKS

In order to run the DISK TEST (below, p. 2.7), you must first make a test diskette for each disk drive in the system.

1. Press the Down Arrow several times until "MAKE TEST DISKS" is highlighted.

2. Accept this option by pressing the RETURN key.

3. Remove the diagnostic diskette from the internal drive.

4. When asked for the drive number for which you will create your test diskette, type a number which corresponds to the drive (1 = INTERNAL; 2, 3, and 4 = EXTERNAL) and press RETURN. If you have more than one drive, you must make a test diskette for each drive.

5. Insert a blank diskette into the internal drive. Close the door and press RETURN.

6. When the test diskette is complete, you will be asked if you want to make another test diskette. To create a test diskette for another drive type "Y", press RETURN, and follow the directions on the screen.

7. When finished, reinsert the Dealer Diagnostic Diskette into the internal drive and reboot the system.

Now you are ready to run the diagnostics on your Apple ///.

D. TEST ALL

Normally you should run all the tests when checking out a system. Accepting the TEST ALL option will cause all the tests on the menu (except the RAM - 12V test) to be run one-by-one as if they were selected one at a time.

1. Skip through the tests with the arrow keys until TEST ALL is highlighted.

2. Accept this option by pressing RETURN, and follow through the tests, referring to the notes below where necessary.

3. TEST ALL runs the RAM - 5V test automatically, but **not** the RAM - 12V test. If you are testing a system that has a 12V memory board, the RAM - 5V memory test will check the RAM. If no errors are encountered, the RAM on the 12V board is good. Should the RAM - 5V test fail, run the RAM - 12V test to get the proper location of the failed components. (See RAM - 5V and RAM - 12V TESTS, p. 2.9.)

4. If any errors are encountered, refer to the Apple /// Troubleshooting job aid to determine follow-up action.

E. VIDEO TESTS

The VIDEO diagnostic tests all the various screen and color modes available on the Apple ///. You will be presented with 13 different video displays and be asked to make a subjective evaluation of each one. After each display is presented, press:

SPACE BAR.....IF THE DISPLAY PASSES

RETURN KEY.....IF THE DISPLAY FAILS

ESCAPE KEY.....TO LEAVE THE VIDEO TESTS

LEFT ARROW KEY.....TO RETRY THE TEST

NOTE: With a B&W monitor, different colors will be displayed as different shades of grey. Some B&W monitors are not capable of displaying all the different shades with a single setting of the monitor controls; in particular, parts of the AHIRES screens will be hard to see. You can adjust the brightness control on the back of the monitor to make the picture visible; you should not expect it to be perfectly clear on a B&W monitor.

You will find the chart describing your video display on the next page. The list is in the same order as the test.

WHAT YOU SEE

TEST DISPLAY	B&W MONITOR	COLOR MONITOR
HIRES MODE 1	B&W Pattern only	No Color
HIRES MODE 2	B&W Pattern only	No Color
280 x 192 COLOR HIRES MODE	Negative image	Red and Black
280 x 192 COLOR HIRES MODE 2	B&W Pattern	Green & White/ or Yellow
SUPER HIRES TEST 1	B&W Pattern only	No Color
SUPER HIRES TEST 2	B&W Pattern only	No Color
AHIRES TEST 1	Pattern divided into 4 different shades of grey.	From top to bottom, the pattern is colored: blue, green, & gold or orange.
AHIRES TEST 2	Pattern divided into 4 different shades of grey.	From top to bottom, the pattern is colored: blue, green, & gold or orange.
COLOR BAR & GREY SCALE TEST.	16 shades of grey from white on left to black on right--- may be difficult to resolve.	16 color shades, from left to right: white, aqua, yellow, green, pink, grey, orange, brown, light blue, medium blue, grey, dark green, light purple, dark blue, magenta and black.
APPLE II TEXT MODE 1	Sentence and Alphabet are displayed.	Same as B&W
APPLE II TEXT MODE 2	large #2 is displayed.	same as B&W
APPLE /// 40 COLUMN TEXT MODE	16 blocks of different shades of grey, with color names printed in each box.	16 different colored blocks with the color names printed in each box.

TEST DISPLAY	B&W MONITOR	COLOR MONITOR
APPLE /// 80 COLUMN TEXT MODE	smaller characters across 80 columns	same as B&W

F. SOUND TESTS

The SOUND diagnostic has 3 parts: a soft bell, a hard bell, and a sound that gradually grows in amplitude. After each sound, press:

SPACEBAR.....IF YOU HEAR THE SOUND
or RETURN KEY.....IF YOU DO NOT HEAR THE SOUND

G. DISK TEST

The DISK TEST tests the seek and the read-write functions of the disk drives. IT IS VERY SENSITIVE AND MAY FAIL A DRIVE THAT IS ACCEPTABLE AND USABLE. If a drive passes this test, you can be sure it is good. If it fails, see note at end of this section.

NOTE: Before running the DISK TEST you must have made test diskettes (see section C above).

1. Remove the dealer diagnostic diskette from the internal drive.

2. Insert the test disk that you created earlier. Close the drive door and press RETURN.

3. You will now be asked for the number of external drives. Type the number of external drives in the test system (i.e., do not count the internal drive) and then press RETURN.

4. The test will now run automatically, ending with a test summary, telling you which drives have passed or failed.

5. Remove the test diskette from the internal drive.

6. Reinsert the diagnostic diskette and press RETURN.

NOTE: IF A DRIVE FAILS THE DISK TEST, 1) TRY THE TEST AGAIN WITH A DIFFERENT TEST DISKETTE (a worn test disk can cause failure); 2) TEST THE D-SPEED USING THE APPLE][CALIBRATION OR DISK ALIGNMENT AID DISKETTE IN EMULATION MODE, AND ADJUST IF NECESSARY [SOS 1.3 has a narrow tolerance (+ or - 10), so get as close to 0 as possible]; THEN TRY THE DISK TEST AGAIN. IF THE DRIVE STILL FAILS, SEE THE APPLE /// TROUBLESHOOTING CHART.

H. KEYBOARD TESTS

The keyboard test is divided into 4 parts:

1. Alphanumeric Keys
2. Special Function Keys
3. Numeric Keypad Keys
4. Keyboard Interrupt

NOTE: The steps below must be followed exactly or the test will fail.

1. Alphanumeric Keys:

   Every alphanumeric keystroke possible will be displayed on the screen. As you press the keys, their characters should disappear. Do not use the SHIFT key except where directed to, and press the SPACE bar last.

   a) Press the left SHIFT key and while holding it down press the 2 key.

   b) Press the right SHIFT key and while holding it down press the = key.

   c) Press the CONTROL key and while holding it down press the A key.

   d) Press all the remaining keys on the main keyboard except the SPACE bar. Each time a key is pressed, its character should disappear from the screen.

2. Numeric Keypad Keys:

   This test proceeds in the same manner as the Alphanumeric Key test, but for the keys on the numeric keypad.

   After you have removed all of the keys displayed on the monitor, you will automatically go to the Special Function Keys test. Notice that you can abort this test at any time by pressing ESCAPE.

3. Special Function Keys:

   a) After the special function keys appear press the ALPHA LOCK key twice. This will test the ALPHA LOCK key. **Be sure the ALPHA LOCK key is left in the up or unlock position.**

   b) The diagnostic will then ask you to press the SPACE BAR and to hold it down. This is to test the slow repeat function. Don't release the SPACE BAR: to complete the next step you must still be holding the SPACE BAR down.

c) Next, you will be asked to press the OPEN APPLE key and SOLID APPLE key down simultaneously. This tests both the OPEN APPLE key and the fast repeat function.

d) Now release all the keys; then press first the SOLID APPLE key and then the SPACE BAR. This is to test the repeat inhibit function.

4. Keyboard Interrupt Test:

When the keyboard interrupt test comes up on the screen simply press any key to continue. The diagnostic will inform you of the keyboard status and then return to the main menu.

J. ROM TEST

The system takes over and you will see one of two messages:

ROM PASSES . . . or ROM FAILS . . .

NOTE: If you selected the TEST ALL option from the main menu, you will be returned to the menu after the ROM test. The test results will be displayed to the right of each test option.

K. RAM - 5V and RAM - 12V TESTS

If you use the TEST ALL option, the system will automatically run the 5V test, and if it reports no errors, you can be confident that all RAM are good, no matter which style of board is installed in the Apple ///. If it reports failures, however, you must run the RAM - 12V test in order to obtain the correct locations of failed RAM.

The instructions for both tests are the same (except for reading the failure messages). Read through the steps below, and then run the test.

1. Get the memory size from the bottom of the Apple /// where the serial number is located.

2. Select either the RAM - 5V or the RAM - 12V test, depending on the style of memory board in your Apple (see Section A above, p. 2.3), and press RETURN to begin the test.

CONTINUED ON NEXT PAGE

3. The test will now attempt to determine the size of memory in the system. There are three possible outcomes:

a) A screen will appear with the correct memory size. Press the SPACE bar and the RAM test will start.

b) A screen will appear with the wrong memory size.

(1) Press the RETURN key, and

(2) A screen will appear and ask you for the correct memory size.

(3) Type the letter that corresponds to the correct memory size.

(4) The first screen will reappear with the newly selected memory size. If this is correct, press the SPACE bar and the test will start. If the memory size is not correct, press the RETURN key and the second screen will reappear so that you may reselect the correct memory size.

c) The test will not be able to determine the size of memory by itself, so a screen will appear and ask you for the correct memory size.

(1) Select the letter that corresponds to the correct memory size.

(2) A screen will appear with the selected memory size. If this is correct, press the SPACE bar and the test will start. If the memory size is not correct, press the RETURN key and the second screen will reappear so that you may reselect the correct memory size.

NOTE: Selection of the wrong size memory may lead to indication of RAM MAP FAILURE. Reboot the disk and try to run the test again.

4. The test will then check the RAM and report any failures. The 12V test gives RAM locations according to a grid of letters and numbers printed along the side and top of the 12V board (rows B, C, D; columns 2 through 17: see Figure 3).

The 5V test gives RAM numbers (U1 through U32). On early versions of the 5V board, these U-numbers were printed next to the RAM locations on the board; on later 5V boards, the U-numbers are no longer printed: to locate U-numbers on those boards, use Figure 4.

NOTE: If the correct memory is selected and the message RAM MAP FAILURE appears, it may indicate that the memory board or the main logic assembly needs to be replaced. (See Apple /// Troubleshooting Flowchart).

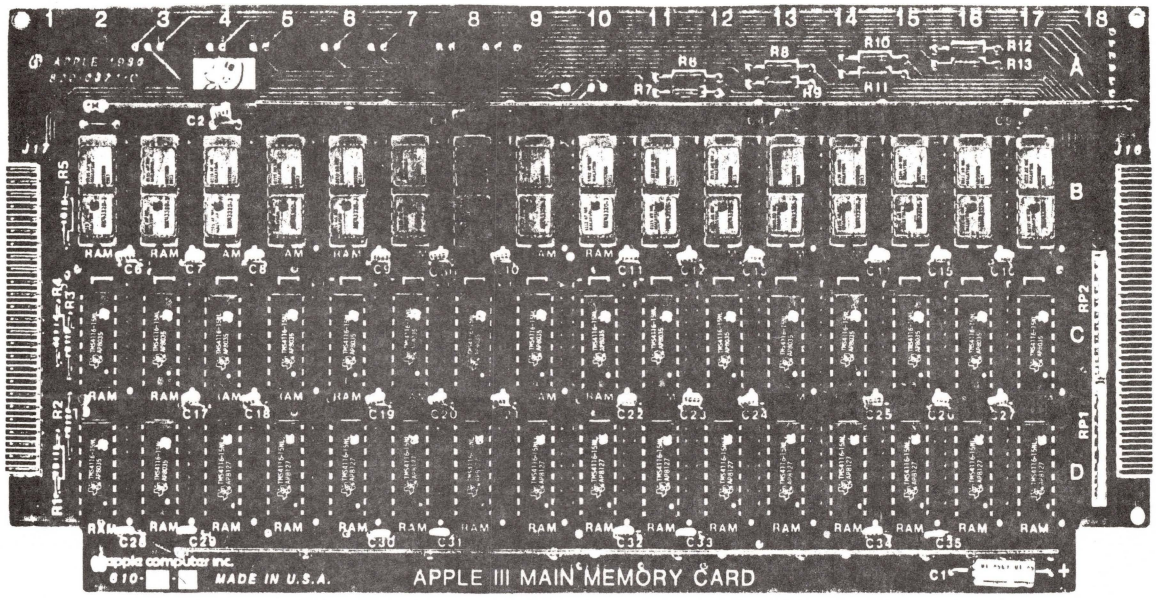

FIGURE 3 – 12V BOARD

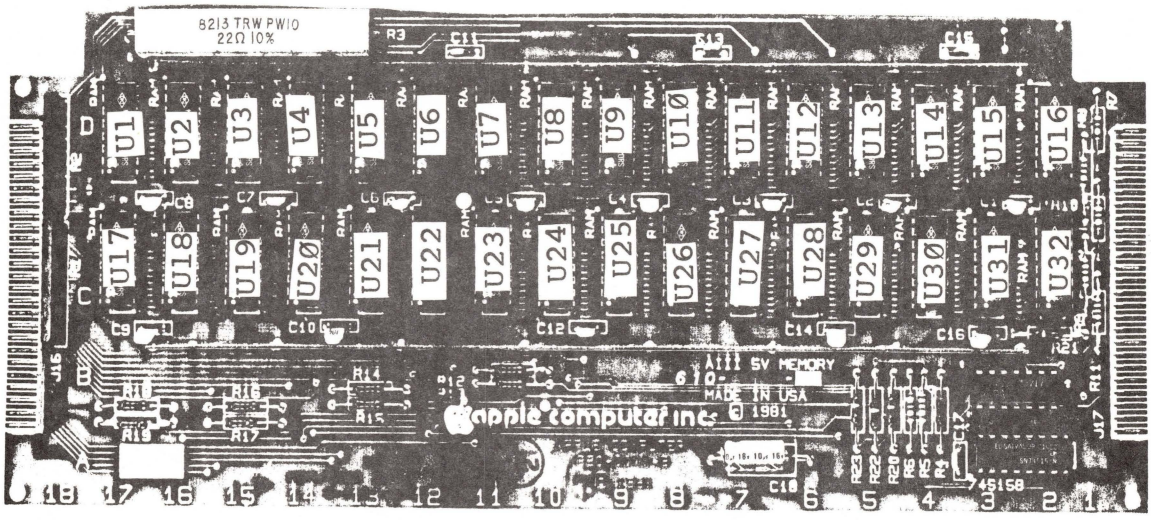

FIGURE 4 – 5V BOARD

Apple /// Technical Procedures

Section 3

Troubleshooting

Contents:

Using the Diagnostic Flowchart.....3.3
Steps Referred to in the Lettered Boxes of the Flowchart..3.4
ProFile Problems with the Apple ///.....3.8

A. USING THE DIAGNOSTIC FLOWCHART

1. The flowchart is made up of numbered and lettered boxes. The numbered boxes contain directions for proceeding through the flowchart based on the symptoms that show up on the Apple ///.

2. The lettered boxes contain a list of numbers. Each number refers to one of the 11 steps.

3. Always begin troubleshooting at Box 1 of the flowchart, power on with the SOS System Demonstration diskette. When the Apple ///'s symptoms lead you through the flowchart to a lettered box containing a list of troubleshootingsteps, follow the instructions below:

   a. Turn the power off.

   b. Carry out the designated troubleshooting step. (Start at the top of the list of numbered steps.)

4. When a troubleshooting step leads you to open the Apple ///, you should:

   a. Check to make sure all connecting cables are properly hooked up.

   b. Check all boards to make sure all IC chips are properly seated.

   c. Power on to see if the problem is eliminated.

      (1) If the problem IS NOT eliminated:

         (a) Turn the power off.

         (b) Replace whatever spare module you just put into the Apple /// with original.

         (c) Carry out the next troubleshooting step listed in the lettered box.

         (d) Go back to Step 4c above.

      (2) If the problem IS eliminated:

         (a) Leave the swapped module in place and continue through the Diagnostic Flowchart.

         (b) Take the "bad" module and prepare it for shipment to your Level II Service Center.

5. The Diagnostic Flowchart is designed to test only the basic Apple /// system. Disconnect any peripheral devices and cards and troubleshoot them separately according to the procedures explained in the appropriate Level 1 Service Training module.

6. Each swap step involves exchanging a known good part from your spares kit with the questionable part from the Apple ///.

   a. When swapping, first just connect the cable(s) to the new module so you can see if the swap fixes things or not.

   b. Don't fully install the new module and screw everything down--if the new module doesn't solve the problem you'll just have to take it out again.

B. STEPS REFERRED TO IN THE LETTERED BOXES OF THE FLOWCHART

1. Swap the appropriate connecting cable.*
   V = Video cable (if available)
   PS = Power Supply cable
   DD = Disk Drive cable
   KB = Keyboard cable

   NOTE: The keyboard and disk drive cables are identical to each other. Your Spares Kit may only list the DD cable, but you can use it whenever you need to swap the KB cable.

2. Swap the power supply.

   a. Check the power supply fuse first; swap it if it's burned out.

3. Swap the drive.

   a. If the drive proves to be the problem, take the problem drive and further isolate the defective module down to the analog card or mechanical assembly:

      (1) Swap the analog card.

         (a) Take the analog card of the "bad drive", put it in the good drive, and power on again. If the drive does not work you know the problem with the "bad drive" is with the analog card. If the drive does work you know the "bad drive" is with the mechanical assembly.

(b) If the mechanical assembly proves to be the problem it may just be an adjustment problem. You can run the disk tests for the Apple II in emulation mode on the /// and make any necessary adjustments to see if they eliminate the problem.

4. Swap the main logic board.

5. Swap the keyboard.

6. Swap the RAM memory board. (You may have to reload the new board with the RAM from the original board.)

7. Try booting again.

8. Try booting a different SOS diskette.

9. Swap the video monitor.

10. Swap the speaker.

11. Swap the designated RAM IC chips. (Refer to the Apple /// Diagnostics - Section 2, RAM - 5v TEST and RAM - 12v TEST.)

12. Look through the back slots of the of the Apple /// to see if the red light (LED) is on. If it is not on:

    a. Check the power supply fuse first; swap it if it's burned out. (See Apple /// Takeapart - Section 1 "REMOVING THE POWER SUPPLY". Once you have removed the power supply, the fuse will be easy to find.)

    b. Swap the power supply.

13. Press CONTROL/RESET (Warmboot); if Warmboot is successful, replace the Power Light.

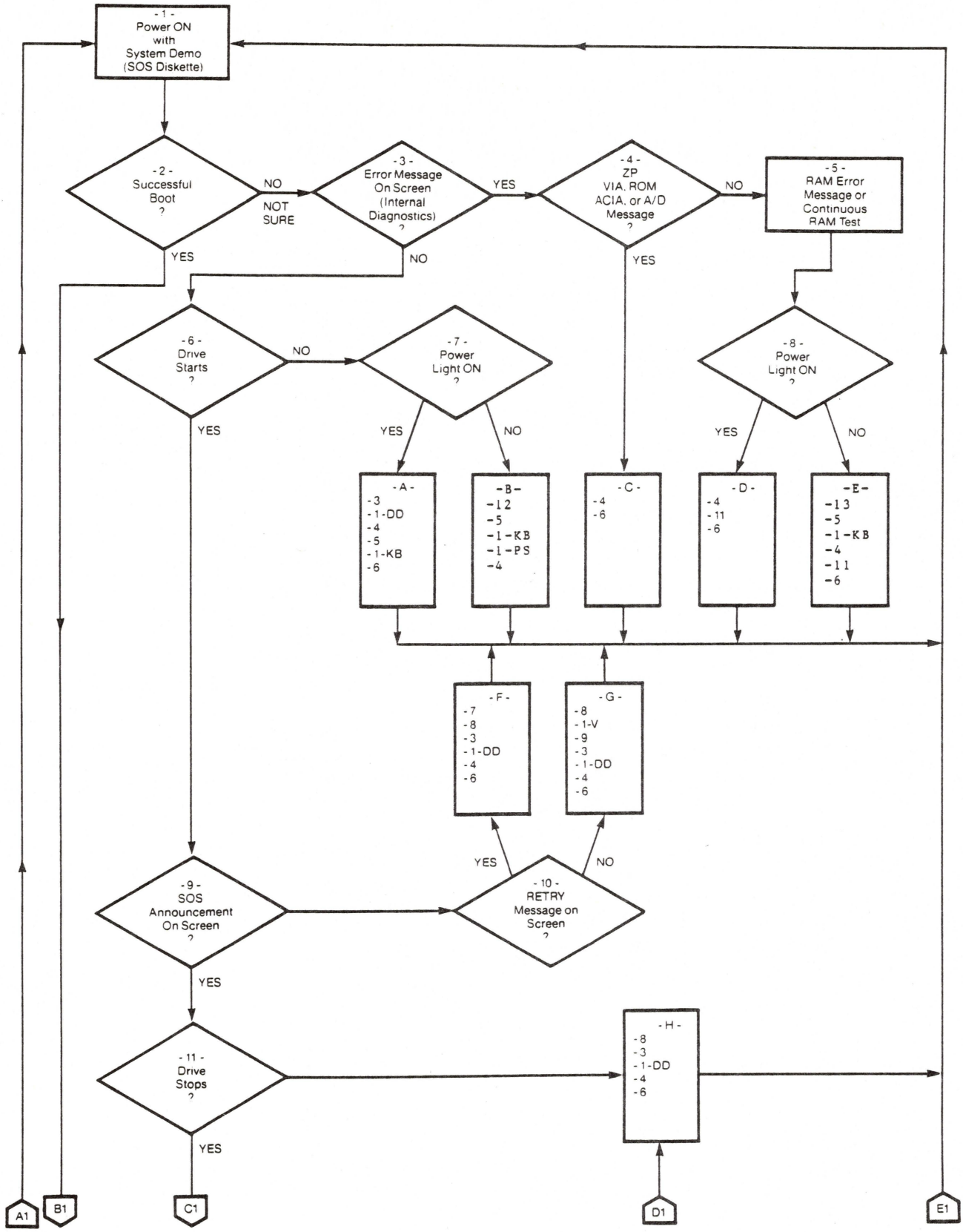
- 1 -
Power ON
with
System Demo
(SOS Diskette)
- 2 -
Successful
Boot
?
NO
NOT
SURE
- 3 -
Error Message
On Screen
(Internal
Diagnostics)
?
YES
- 4 -
ZP
VIA, ROM
ACIA, or A/D
Message
?
NO
- 5 -
RAM Error
Message or
Continuous
RAM Test
YES
NO
YES
- 6 -
Drive
Starts
?
NO
- 7 -
Power
Light ON
?
- 8 -
Power
Light ON
?
YES
YES
NO
YES
NO
- A -
- 3
- 1 - DD
- 4
- 5
- 1 - KB
- 6
- B -
- 12
- 5
- 1 - KB
- 1 - PS
- 4
- C -
- 4
- 6
- D -
- 4
- 11
- 6
- E -
- 13
- 5
- 1 - KB
- 4
- 11
- 6
- F -
- 7
- 8
- 3
- 1 - DD
- 4
- 6
- G -
- 8
- 1 - V
- 9
- 3
- 1 - DD
- 4
- 6
YES
NO
- 9 -
SOS
Announcement
On Screen
?
- 10 -
RETRY
Message on
Screen
?
YES
- 11 -
Drive
Stops
?
YES
- H -
- 8
- 3
- 1 - DD
- 4
- 6
A1
B1
C1
D1
E1

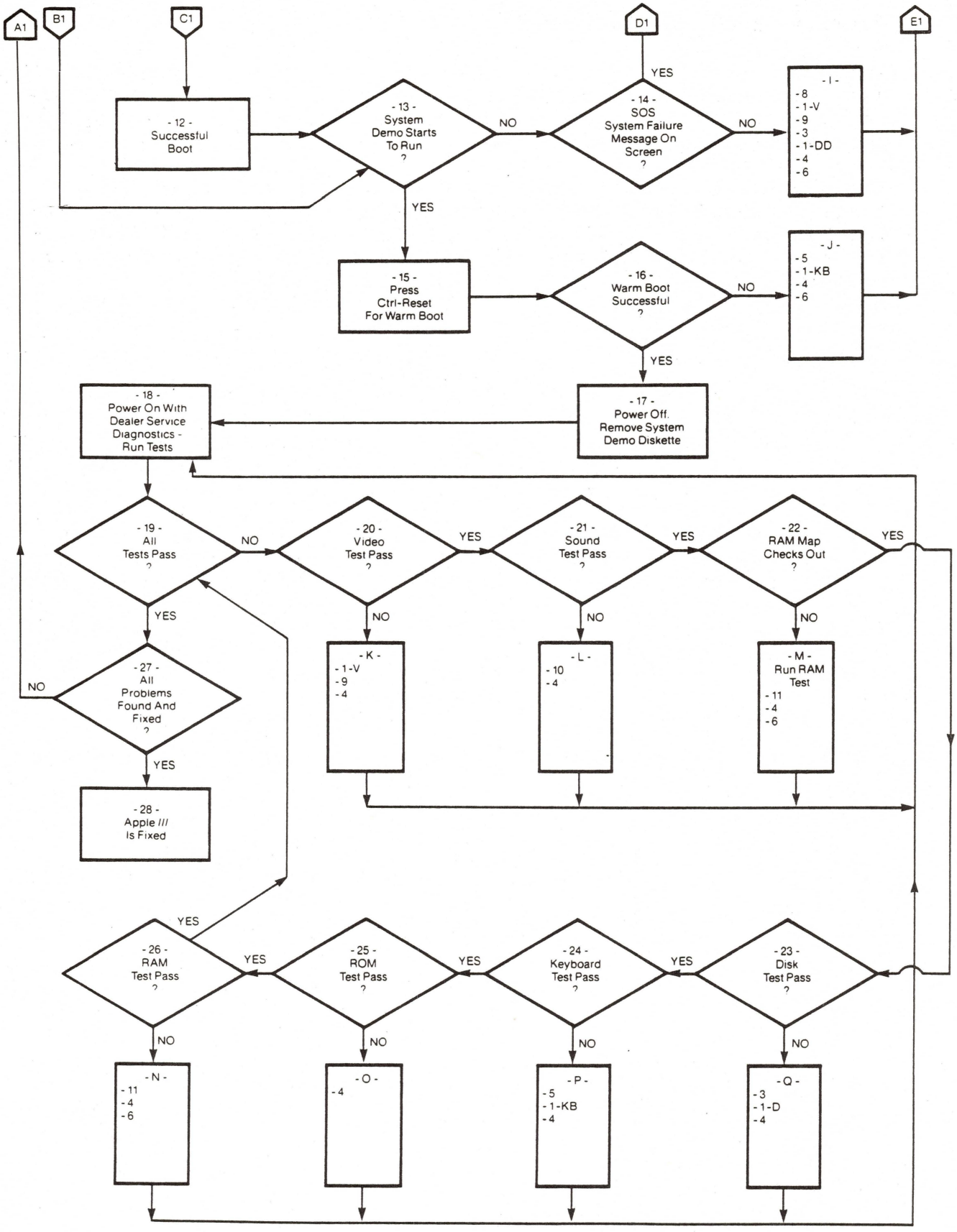
A1
B1
C1
D1
E1
- 12 - Successful Boot
- 13 - System Demo Starts To Run ?
NO
YES
- 14 - SOS System Failure Message On Screen ?
NO
YES
- I - - 8 - 1-V - 9 - 3 - 1-DD - 4 - 6
- 15 - Press Ctrl-Reset For Warm Boot
- 16 - Warm Boot Successful ?
NO
YES
- J - - 5 - 1-KB - 4 - 6
- 17 - Power Off. Remove System Demo Diskette
- 18 - Power On With Dealer Service Diagnostics - Run Tests
- 19 - All Tests Pass ?
NO
YES
- 20 - Video Test Pass ?
NO
YES
- 21 - Sound Test Pass ?
NO
YES
- 22 - RAM Map Checks Out ?
NO
YES
- K - - 1-V - 9 - 4
- L - - 10 - 4
- M - Run RAM Test - 11 - 4 - 6
- 27 - All Problems Found And Fixed ?
NO
YES
- 28 - Apple /// Is Fixed
- 23 - Disk Test Pass ?
NO
YES
- 24 - Keyboard Test Pass ?
NO
YES
- 25 - ROM Test Pass ?
NO
YES
- 26 - RAM Test Pass ?
NO
YES
- N - - 11 - 4 - 6
- O - - 4
- P - - 5 - 1-KB - 4
- Q - - 3 - 1-D - 4

ProFile Problems with the Apple ///

Potential problems may arise when the RFI-shielded cables are used with earlier versions of the Apple /// ProFile Interface Card. The problems range from random data handling errors to unreadable files saved on the ProFile.

The problem is caused by the resistor array values on the Apple /// ProFile Interface Card (at location DM 1 and DM 2). The resistor arrays were changed from 330 Ohms to 100 Ohms. Interface cards with the 330 Ohm resister arrays (manfactured prior to October 1983) are not compatible with the new ProFile Shielded Cable. An impedance mismatch occurs when the older interface cards are connected to the shielded cable, resulting in various problems.

The following solutions will correct the problem:

1. Use the flat ribbon cables; they will operate on either the 330 Ohm or the 100 Ohm revisions of the ProFile Interface Card.

2. If the RFI-shielded cable is to be used, verify that the Apple /// ProFile Interface Card has 100 Ohm resister arrays at locations DM 1 and DM 2.

Apple /// Technical Procedures

Section 4

Modifications

Contents:

Installing the Apple /// Clock Kit.....4.3
Setting the Apple /// Time.....4.4
Adjusting the Apple /// Clock Speed.....4.5

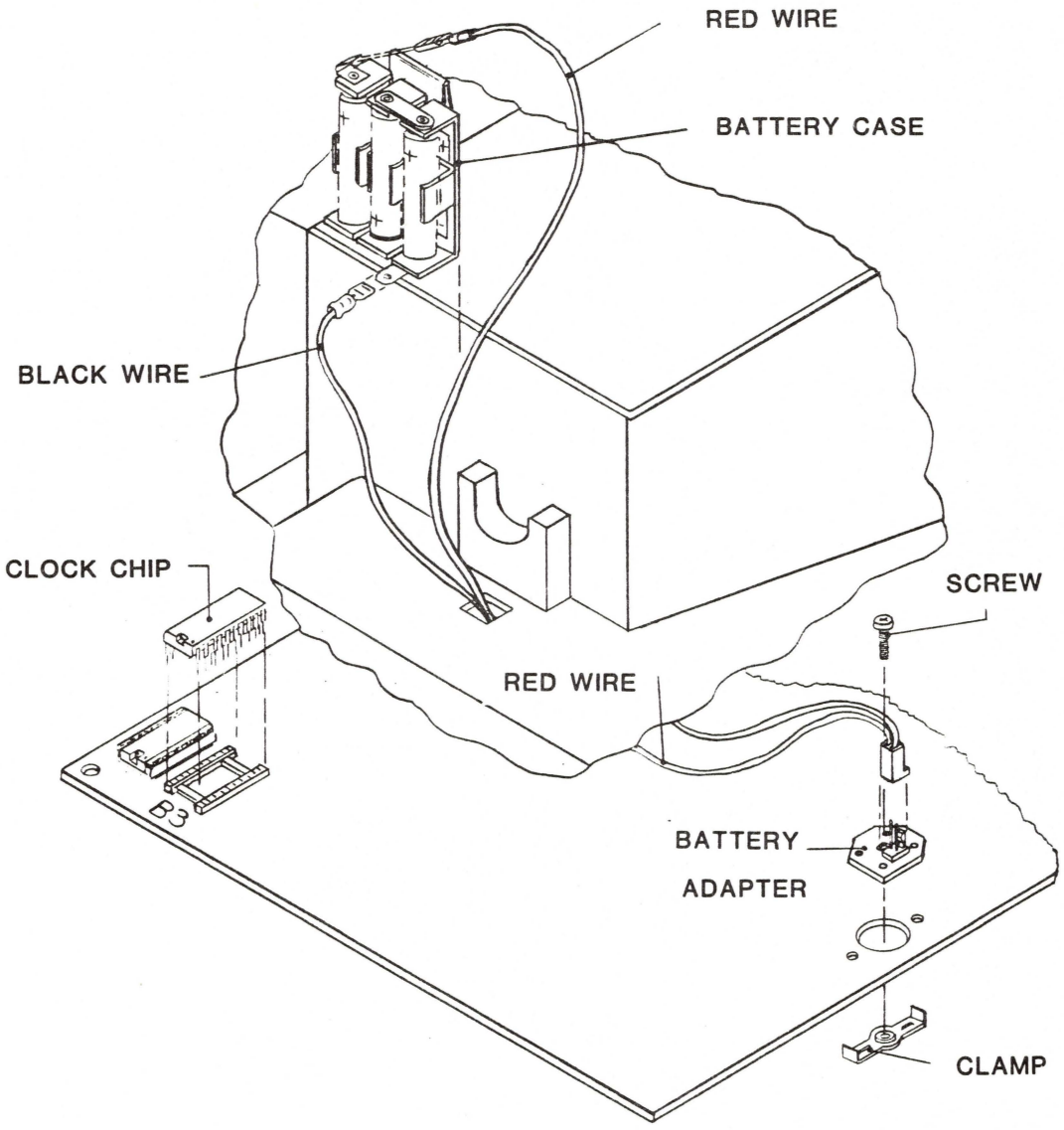
RED WIRE
BATTERY CASE
BLACK WIRE
CLOCK CHIP
SCREW
RED WIRE
B3
BATTERY
ADAPTER
CLAMP

NECESSARY TOOLS:

#1 and #2 Phillips screwdriver
Apple /// System Utilities diskette
Apple /// Clock Kit
Apple /// Clock Calibration diskette

INSTALLING THE APPLE /// CLOCK KIT

1. Remove the Apple /// top cover and Main Logic Board. For instructions on removing the Main Logic Board refer to the Take-apart section of the Apple /// Technical Procedures.

2. Place the Main Logic Board on a flat surface in front of you so that the empty socket at B3 is located to your left. Insert the Clock Chip into the empty socket with the notch on top of the the chip facing toward the front as shown in figure 1.

3. Lift the Main Logic Board gently and place the clamp through the two holes on the middle right-hand side of the Main Logic Board has shown in figure 1. Retain the clamp in place with your finger.

4. Place the battery adapter PCB over the large hole with the long flat side of the battery adapter PCB toward the right-hand edge of the Main Logic Board as shown in Figure 1. The battery adapter PCB should be seated between the legs of the clamp.

5. Insert the screw through the middle of the battery adapter and then tighten the screw until the battery adapter PCB is snug against the Main Logic Board.

6. Install 3 "AA" Alkaline batteries into the battery pack as labeled in figure 1, and on the battery pack. Now attach the lugs of the red and black wires of the battery cable to the battery case. Observe the proper polarity as shown in figure 1.

7. Turn the Apple /// right-side up. Clip the battery case on to the lip of the casting to the left of the speaker. Run the molex connector end of the battery cable down through the hole below the speaker on the Apple /// as shown in figure 1.

8. Reinstall the Main Logic Board. Be sure to connect the female end of the lug connector to the male end on the battery adapter PCB, now attached to the Main Logic Board.

9. Make all of the necessary connections to the Main Logic Board and reinstall back to the Apple /// case. Replace the Apple /// cover.

SETTING THE APPLE /// CLOCK

In order to calibrate the Apple /// clock, the clock time must be set close to the exact second so the number of seconds lost or gained can be determined.

NOTE: To prevent confusion, any text that is to be entered into the computer is enclosed by curly-brackets {}. Type everything, including punctuation, between them; but don't type the curly brackets themselves.

EXAMPLE: If you are supposed to type 1-2-3-4, it will appear in the text as {1234}.

1. Boot the Utilities diskette and select {D}, Device handling commands.

2. Select {T} from the Devices Menu, set time and date.

3. The cursor should now be in the lower portion of the screen that says, "Set the date to: [ ]".

4. Type in the date in the format: {day <SPACE> month <SPACE> year}, where the month can either be the numerical representation or a three letter abbreviation and then press <RETURN>.

   If the date is January 1, 1982 it can be typed in as: {1 Jan 82} or {1 1 82}.

5. Find out what the correct time is. You can do that be calling the local time on the telephone.

6. The cursor should be in the box that says, "Set the time to: [ ]".

7. Listen to the time on the telephone: you should hear the hour-minute and the upcoming ten second mark and then a beep.

8. Type in the time including the seconds which will represent the upcoming beep in the format: {hour:minute:second <SPACE> Xm}.

   If the upcoming beep will be 4:10:00 pm, you may enter the time as {4:10:00 pm}, {16:10:00} or {04:10:00 pm}.

9. When you hear the tone, press <RETURN>.

10. Verify that the beeps occur at the same time as the seconds change on the Utilities time display in the upper right hand corner on the monitor.

11. Repeat steps 6 thru 9 until the beeps are approximately concurrent with the seconds displayed on the monitor.

ADJUSTING THE APPLE /// CLOCK SPEED

The Apple /// clock is calibrated by comparing the Apple /// System clock to the one second intervals of the clock chip. In order to calibrate the clock within reasonable accuracy without the use of very expensive calibration equipment, a 24 - 48 hour observation is required.

NOTE: The keyboard on the Apple /// Plus does not have to be removed to adjust the clock speed. The trimmer capacitor can be accessed through a small hole in the bottom of the base plate, underneath the keyboard (Figure 2, Item 1).

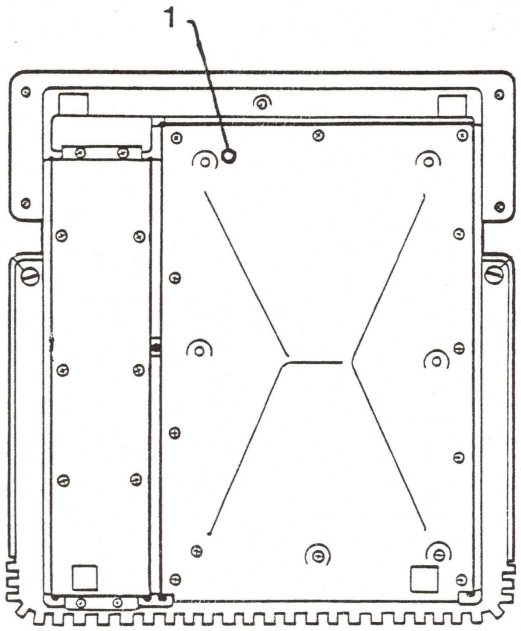

FIGURE 2

1. Disconnect all connectors on the back of the Apple ///.
2. Turn the Apple /// over and remove the 5 screws that fasten the beige keyboard cover to the case.
3. Remove the keyboard cover. Then turn the Apple /// rightside up and remove the 4 screws that hold the keyboard in place.
4. Connect the power cord and the video cable and boot the Apple /// Clock Calibration Program.
5. Select the 10 Second interval by pressing down the <ALPHA LOCK> key.

6. Lift the keyboard up and lay it carefully against the sloped Apple /// front cover.

7. Wait until the speaker clicks twice (20 seconds) and note the value of the indicated number. The number should read +560, +/- 9.

8. If the indicated number is not within the range indicated in step #7, adjust the trimmer capacitor located in the center of the keyboard with a small screwdriver. When you adjust the trimmer pot, the number will not change right away; it takes 10 seconds to update. Turn the trimmer capacitor clockwise to increase the value and counterclockwise to decrease the value.

NOTE: On the Apple /// Plus, the trimmer capacitor can be turned through the hole in the keyboard (Figure 2, Item 1). You do not have to take the keyboard apart.

9. Wait until speaker clicks at least twice to insure that the indicated number remains constant.

10. Repeat steps 7 thru 9 until the indicated number is between 551 and 569 (+560 +/-9). Once the number has been set it may vary slightly.

11. Record the indicated number of the Apple /// Calibration Program on a piece of paper and attach it to the front of the Apple ///.

12. After approximatelly 24 hours, boot the Utilities diskette and press {D}.

13. Find out the correct time. You can do that by calling the local time on the telephone.

14. Note the difference between the ten second beeps on the telephone and the seconds on the Apple /// clock in the upper right-hand corner of the monitor.

15. Record the time difference to the closest 1/2 second on paper.

16. If the observation period has been longer or shorter than 24 hours calculate the number of 24 hour periods by dividing the observation period by 24. Let's walk through an example.

    Suppose an Apple /// clock has been running for 28 hours and has gained 5 seconds. The current value of the Apple /// Clock Calibration Program is +780.

    Observation period in hours ÷ 24 = Number of 24 hour periods.

    28 ÷ 24 = 1.16 (24 hour periods).

17. Calculate the time difference in seconds per 24 hour period by dividing the time difference recorded in step #14 by the Number of 24 hour periods.

    Time Difference ÷ Number of 24 hour periods = Time Difference in seconds per 24 hour period.

    5 ÷ 1.16 = 4.31 seconds difference per 24 hour period.

18. Calculate the Clock Offset by multiplying the Number of seconds per 24 hour period by 118.

    Time Difference in seconds per 24 hour period X 118 = Clock Offset

    4.31 X 118 = 508.58

19. Calculate the new Apple /// Clock Calibration value by adding or subtracting the clock offset. If the clock is gaining time, the offset value is subtracted from the Apple /// Clock Calibration Value. If the clock is losing time, the offset value is added to the Apple /// Clock Calibration Value.

    Since the clock is gaining time we subtract from the old value:

    780 (old value) - 508.85 (offset) = 271.15 (new value)

20. Adjust the Apple /// Clock Calibration Program Value to the new value found in step 19, following the procedure in steps 7 through 9.

EXAMPLE 2

An Apple /// clock has been running for 34 hours and lost 2 seconds. The value of the Apple /// Clock Calibration Program value is +480. What value should the Apple /// Clock Calibration Program indicate after adjustment?

1. Number of 24 hour increments: 34/24 = 1.42
2. Number of seconds per 24 hour period: 2 ÷ 1.42 = 1.41
3. Clock offset: 1.41 X 118 = 292.64
4. New Calibration Program value: 480 + 293 = 773

Apple /// Technical Procedures

Section 5

Apple /// Plus Diagnostics

Contents:

Introduction.....5.3
Diagnostics Setup.....5.3
Diagnostics Menu.....5.3
Make Test Disks (Diskettes).....5.4
RAM Test.....5.5
ROM Test.....5.6
Calendar/Clock Test.....5.6
Disk Test.....5.6
Keyboard Tests.....5.7
Sound Tests.....5.9
Video Tests.....5.10
Test All.....5.13

A. INTRODUCTION

NOTE: Before using the Diagnostic Diskette, make a backup by using the Device Handling Commands on the System Utilities diskette.

This section describes the function of each of the diagnostic tests and how to run them. You will need a known-good disk drive and a copy of the diskette "Apple /// Plus Dealer Diagnostic Program" (P/N 077-0032). You will also need a blank diskette, to be made into a test diskette, for each disk drive you intend to test.

As you run the diagnostics, some of the messages on the screen will refer to the Apple /// instead of the Apple /// Plus. This message has no significance as long as you are using the correct diagnostic diskette.

This comprehensive diagnostic tests the ROM, RAM, Calendar/clock chip, keyboard, sound and video of the Apple /// Plus. You can run the diagnostic tests at random (except the KEYBOARD TEST which will not run unless one of the other tests is run before it), or in sequence using Test All. When you run the tests one at a time, you are returned to the Main Menu when the test ends or fails. Selecting "Test All" causes one test to run after the other, as long as each test passes. If any test fails or if you have completed all of the tests, you are returned to the Main Menu.

NOTE: Some of the diagnostics will NOT pass unless they are run EXACTLY as specified. Before you run the following diagnostic tests make sure you read ALL instructions FIRST:

Make Test Diskettes

Keyboard tests

Video tests--especially the Interlace test

NOTE: Running the Keyboard test first can cause the system to hang. So before running the Keyboard test, run any other test first (ROM, RAM, etc.).

B. DIAGNOSTICS SETUP

1. Check to see that your Apple /// Plus and all associated peripherals are hooked up properly.

2. Insert the diagnostics diskette into the internal disk drive and boot the system.

3. If the text appears to vibrate, switch the Interlace switch to the off (0) position. (The switch is located on the left side of the computer about halfway back.)

C. DIAGNOSTIC MENU

1. After you have booted the diagnostic program, the following menu is displayed on the monitor.

```
APPLE /// PLUS DEALER TEST

          MAIN MENU

TEST ALL

RAM                      (NOT TESTED)
ROM                      (NOT TESTED)
CALENDAR/CLOCK           (NOT TESTED)
DISK                     (NOT TESTED)
KEYBOARD                 (NOT TESTED)
SOUND                    (NOT TESTED)
VIDEO                    (NOT TESTED)

MAKE TEST DISKS

PRESS:   UP/DOWN ARROWS TO SELECT TEST
         RETURN TO RUN TEST
```

NOTE: Because the Apple /// Plus runs several internal diagnostics before booting, coming this far is a vote of confidence for correct system operation.

2. You will notice that TEST ALL is highlighted in inverse video. The inverse video indicates which test will run when RETURN is pressed.

3. UP/DOWN arrows move the inverse cursor line through the list of menu options one-by-one. Pressing RETURN accepts and runs the highlighted option.

D. MAKE TEST DISKS (DISKETTES)

This procedure creates a diskette used for the disk test. You will need one diskette for <u>each</u> drive you are going to test. These test diskettes can be made on any Apple /// Plus system with a known-good disk drive, then used whenever you need to test a disk drive. The known-good disk drive must be configured as Drive 2.

1. Press the down arrow several times until MAKE TEST DISKS is highlighted.

2. Accept this option by pressing the RETURN key.

3. The screen displays:

TEST DISKETTE MAKER

PLACE DISK TO BE FORMATTED IN DRIVE 2

WARNING

DISKETTE DATA IN DRIVE 2 WILL BE ERASED

PRESS ANY KEY TO BEGIN

4. Insert a blank disk into the known-good drive 2. Close the door and press RETURN. The same message remains on the screen during the process.

5. When the test diskette is complete, you will be asked if you want to make another test disk. Pressing "Y" will return you to step 5.

6. If you do not want to make any more test diskettes, press any key other than Y and you will return to the MAIN MENU.

E. RAM TEST

1. To run the RAM test if you have not selected TEST ALL, press the up or down arrow through the Main Menu until RAM TEST is highlighted; then press RETURN.

2. The test first attempts to determine the size of system memory. There are two possible outcomes:

   a. A screen appears with the correct memory size. Press SPACE BAR and the RAM test starts.

   b. A screen appears with the wrong memory size. Press RETURN. The test prints "RAM MAP FAILED" and returns to the Main Menu. If this happens run the RAM test again.

3. If the memory size was correctly determined, the test then checks the RAM and reports any failures by their memory board location (e.g., D10, D20.)

4. Upon completion of the test, the Main Menu appears (unless you have selected Test All).

F. ROM TEST

1. Use the up/down arrows until ROM Test is highlighted; then press RETURN.

2. The system takes over and you will see one of two messages:

   ROM PASSES . . . or **ROM FAILS . . .**

3. Upon completion of the test, the Main menu reappears, unless you have selected Test All.

G. CALENDAR/CLOCK TEST

This test checks all functions of the calendar/clock chip. Failures, if encountered, are reported on the monitor. If any part of the test fails, the chip should be replaced.

H. DISK TEST

This option runs a series of tests on each Apple /// Plus drive you wish to test. The drives are tested one at a time. If one fails, the test then restarts for the next drive to be tested. A test diskette is required for each drive you intend to test. (See next page.)

1. Remove the Dealer Diagnostic disk from the internal drive. Then press RETURN to continue.

2. Install the test diskettes, which were made by the "Make Test Disks (Diskettes) procedure, in all drives to be tested.

   NOTE: Only test diskettes made with this diagnostic will work for the disk tests.

3. To start the test, press the key (1-4) corresponding to the number of drives you have to test. If you decide not to run the test, press '0'.

4. If a drive fails this or any other test in the series, the system stops testing that drive and starts the series of tests on the next drive.

5. As the tests continue, the screen clears, the system beeps and the following message appears:

```
APPLE /// MODE DISKSWITCH TEST

REMOVE DISKETTE FROM DRIVE 1
AND PUT IT BACK IN AGAIN

PRESS RETURN TO CONTINUE
```

Open the drive door, pull the test disk out from the drive about 1 inch and put it back in. Close the disk door and press RETURN. The test status is briefly displayed and the screen clears. (This switch is used by SOS during some of its operations.)

6. The Disk Track Seek test now starts. Thirty four tracks are displayed on the screen and are alternately tested, from the outermost track to the innermost track, until the middle track is reached. The status of each track is displayed.

7. Disk speed test first reformats track 52 on the test diskette, then checks the DSPEED. A scale between -100 (slow) and +100 (fast) is shown with an arrow pointing to the measured value. The computer beeps if Dspeed is out of spec (+/- 10). If there is no beep, the value is acceptable. The value is displayed until you press the ESCAPE key to continue. The screen then clears and the message:

   - RESTORING TEST DISKETTE -

   is displayed. Do NOT turn the power off or open the drive door while the restoring procedure is in progress: if you do, it will destroy the test diskette. If there are other drives to be tested, steps 5 thru 6 repeat. When all drives have been tested the Main Menu reappears (unless the Test All option was selected, in which case the next test starts.)

I. KEYBOARD TESTS

The keyboard test is divided into 4 sections:

1. Alphanumeric Keys
2. Special Function Keys
5. Numeric Keypad Keys
4. Keyboard Interrupt

There is a delay after each section and any special instructions are shown on the monitor at the beginning of each section.

NOTE: Some parts of this test will always fail UNLESS you follow the directions exactly. Read ALL directions carefully before running the Keyboard Tests. **NOTE**s in each section alert you to special procedures.

1. Alphanumeric Keys

    a. Every alphanumeric keystroke possible is displayed.

    b. Press each key and verify that the corresponding letter or number on the screen is removed.

        NOTE: Press the SPACE BAR LAST. Otherwise, the next test will not automatically start. Pressing the space bar twice might cause the test to fail.

    c. You will need to use a combination of keys to remove three of the keys:

        Control "A" for CONTROL
        Shift "2" for left shift and
        Shift "=" for right shift.

2. Numeric Keyboard Test

    a. The keys on the numeric keyboard are displayed.

    b. Press each key and verify that the corresponding number on the screen is removed.

        NOTE: You can abort this test any time by pressing ESCAPE. The test will record a failure if it is aborted.

    c. After you have removed all of the keys displayed on the monitor, the next test automatically starts.

3. Special Function Keys

NOTE: If you hold the keys down too long, this test might fail.

a. After the special function keys are displayed, press the CAPS LOCK (ALPHA LOCK) key once. This tests the CAPS LOCK key.

NOTE: If the Caps Lock key was in the up position, pressing it once puts it in the down position. Leave it in whatever position it is in after pressing it ONCE, or the test will fail.

b. The diagnostic then asks you to press the SPACE BAR and **hold it down**. This tests the slow repeat function. Continue holding the Space Bar down, in order to complete the next step.

c. Simultaneously press the SOLID APPLE and OPEN APPLE keys while continuing to hold the Space Bar down. This tests the OPEN APPLE key and the fast repeat function.

d. Release all the keys. Now press the SOLID APPLE key first and then the SPACE BAR. This tests the repeat inhibit function. Release these keys when you see the message Keyboard Interrupt Test.

4. Keyboard Interrupt Test

When the keyboard interrupt test comes up on the screen, simply press any key to continue. The keyboard pass/fail status is given, and then the Main Menu appears, unless Test All has been selected.

J. SOUND TESTS

The SOUND diagnostic test has 5 parts: a soft bell, a loud bell, and a sound that gradually grows from soft to loud and then repeats. Use the up/down arrows to select the Sound Tests. After each part:

PRESS SPACE BAR IF YOU HEAR THE SOUND

PRESS RETURN IF YOU DON'T

Upon completion of the test, the pass/fail status is shown. You are then returned to the Main Menu unless Test All was selected.

K. VIDEO TESTS

There are several video tests which check the color shades and the different modes in which the monitor can operate. You will be shown a test pattern and asked to indicate what you observe. What you enter will determine whether the system records a pass or fail for the test.

NOTE: The last test checks the Interlace switch. When you see a horizontal white line on the screen, **STOP** and read the directions for this test. (See the last page of this document.)

1. At the beginning of each video test the screen briefly displays the name of the test and tells you which keys to press to indicate if what you saw was what was expected. Many of the tests use the same test pattern. Usually a picture of Winston Churchill appears in the upper-left corner. A grid of diagonal lines appears in the upper-right corner. The lower-half of the screen displays the following message in LARGE letters:

   If you can read this, and
   the test patterns above
   are clear, press space bar.
   Otherwise, press return.

2. Some displays fill the entire screen. If the display shows what it is supposed to (see the table on the following pages), press SPACE BAR to continue. If the display does not show what it was supposed to, press RETURN.

3. Between patterns the following message flashes:

   TYPE SPACE BAR TO ACCEPT

   TYPE RETURN TO REJECT

   TYPE ESCAPE TO ABORT

   NOTE: With a black-and-white monitor, different colors will be displayed as different shades of grey; some black-and-white monitors are not capable of displaying all the different shades with a single setting of the monitor controls. Do not reject the monitor for this reason.

4. The next two pages give the names of the video tests and describe the patterns which should appear on the monitor.

VIDEO TESTS AND PATTERNS

TEST DISPLAY	B&W MONITOR	COLOR MONITOR
APPLE II HIRES MODE PAGE 1	B&W Pattern only	No Color
APPLE II HIRES MODE PAGE 2	B&W Pattern only	No Color
280 x 192 COLOR HIRES MODE PAGE 1	Negative image	Red and Black
280 x 192 COLOR HIRES MODE PAGE 2	B&W Pattern	Green & White/ or Yellow
SUPER HIRES TEST PAGE 1	B&W Pattern only	No Color
SUPER HIRES TEST PAGE 2	B&W Pattern only	No Color
AHIRES COLOR TEST PAGE 1	Pattern divided into 4 different shades of grey.	Top to bottom, pattern is: violet (pink), blue, green, & gold (orange).
AHIRES COLOR TEST PAGE 2	Pattern divided into 4 different shades of grey.	Top to bottom pattern is: violet (pink), blue, green, & gold (orange)
COLOR BAR & GREY SCALE TEST	16 shades of grey from white on left to black on right--- may be difficult to resolve.	16 shades left to right white, aqua, yellow, green, pink, orange, brown, light blue, medium blue, grey, dark green, light purple, dark blue, magenta and black
APPLE II TEXT MODE PAGE 1	Sentence and alphabet are displayed.	Same as B&W

TEST DISPLAY	B&W MONITOR	COLOR MONITOR
APPLE II TEXT MODE page 2. This screen will display for both B&W and color:		

```
2222222222222222222222222222
2222222222222222222222222222
2222222222222222222222222222
                          222
                          222
                          222
2222222222222222222222222222
2222222222222222222222222222
2222222222222222222222222222
222
222
222
2222222222222222222222222222
2222222222222222222222222222
2222222222222222222222222222
```

APPLE /// 40 COLUMN TEXT MODE	16 blocks different shades of grey, with color names printed in each box.	16 colored blocks, color names printed in each box.	

The colors are:

BLACK	MAGENTA	DARK BLUE	LIGHT PURPLE
DARK GREEN	GREY	MEDIUM BLUE	LIGHT BLUE
BROWN	ORANGE	GREY	PINK
GREEN	YELLOW	AQUA	WHITE

APPLE /// 80 COLUMN TEXT MODE	smaller characters across 80 columns	same as B&W

5. Video Interlace Test.

   NOTE: The Interlace switch is located on the left side of the computer halfway back.

   There are two displays used for this test. After seeing the first display (a horizontal white line across the center of the screen), flip the interlace switch to see the other display. The second display is a horizontal and a vertical which cross at the center of the screen.

   a. If the display is not altered when you change the switch position, press RETURN to tell the system that the test failed.

   b. If you can see BOTH displays, one display for each switch position, then press the SPACE BAR to PASS the test.

6. At the end of the Interlace Test turn the Interlace switch to the OFF (0) position.

L. TEST ALL

Accepting this option runs all the tests sequentially. After each test is run you are returned to the main menu where "passed" or "failed" is highlighted. The tests that run are:

RAM
ROM
CALENDAR/CLOCK
DISK
KEYBOARD
SOUND
VIDEO

NOTE: Before running **Test All**, follow the procedure "Make Test Disks (Diskettes)", to make a test diskette for each drive you will test.

1. Skip through the tests using the up/down arrow until TEST ALL is highlighted.

2. Accept this option by pressing RETURN.

3. As each test runs, messages appear on the monitor to tell you what test is running. In some cases you will be asked to enter a response, depending upon what you observe as the test runs. Other tests run automatically and only the results are shown before the next test runs.

Apple /// and Apple /// Plus Technical Procedures

Section 6

Illustrated Parts List

The figures and lists below include all piece parts that can be purchased separately from Apple for the Apple /// and Apple /// Plus, along with their part numbers. These are the only parts available from Apple. Refer to your Apple Service Programs manual for prices.

Contents:

Finished Goods Assembly.....6.3
Universal Parallel Printer Board.....6.5
Logic Board.....6.5
Memory Board.....6.5
ProFile Interface Card.....6.7

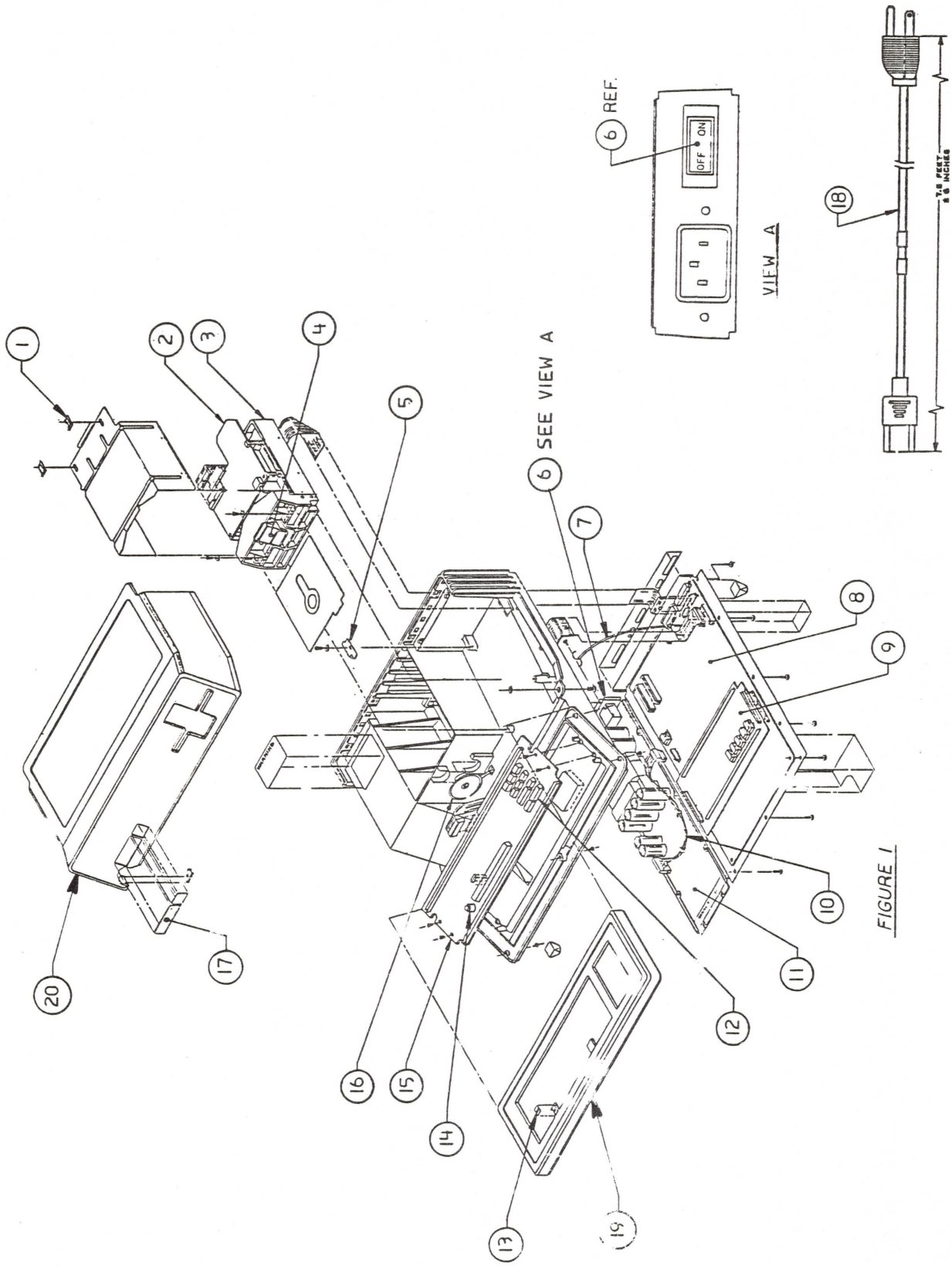

1
2
3
4
5
6 SEE VIEW A
7
8
9
10
11
12
13
14
15
16
17
18
19
20
6 REF.
OFF
ON
VIEW A

FIGURE 1

APPLE /// and APPLE /// PLUS - FINISHED GOODS ASSEMBLY (Figure 1)

Item	Part No.	Description
1	830-0014	Fastener, Retaining Clip
2	661-92002	Apple /// Disk Analog Card
3	661-92014	Apple /// Internal Disk Mechanical Assy
4	815-0162	Door Clip, Disk
5	805-0057	Clip, Disk Hold Down
6	705-0010	Switch, Rocker SPST with ON/OFF Legend
7	590-0032	Cable, Keyboard A///
8	661-91069	Apple /// Logic Board 5V
	661-91122	Apple /// Plus Logic Board 5V
9	661-91124	Apple /// Memory Board w/RAM
10	590-0017	Cable, Power Supply to Apple /// Logic Board
	590-0118	Cable, Power Supply RFI Apple /// Plus
11	661-91037	Apple /// Power Supply 110V
	661-71125	Apple /// Plus Power Supply
12	610-0197	Apple /// Keycap Set
	658-7041	Apple /// Plus Keycap Set
13	825-0163	Label, Power On Lens
14	710-0007	Apple /// Lamp
15	661-91022	Apple /// Keyboard
	661-95127	Apple /// Plus Keyboard
16	600-0009	Speaker Assembly
17	825-0054	Apple Nameplate
18	590-0003	Power Cable, AC
19	815-0087	Keyboard Cover, A///
	815-0719	Keyboard Cover, A/// Plus
20	815-0086	Housing, A///, A/// Plus

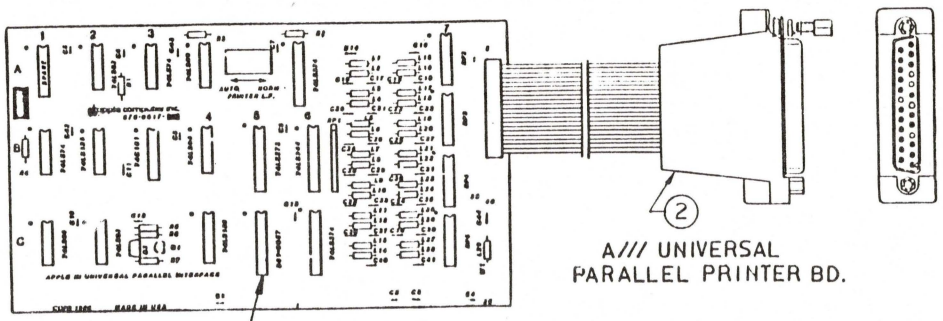

FIGURE 2

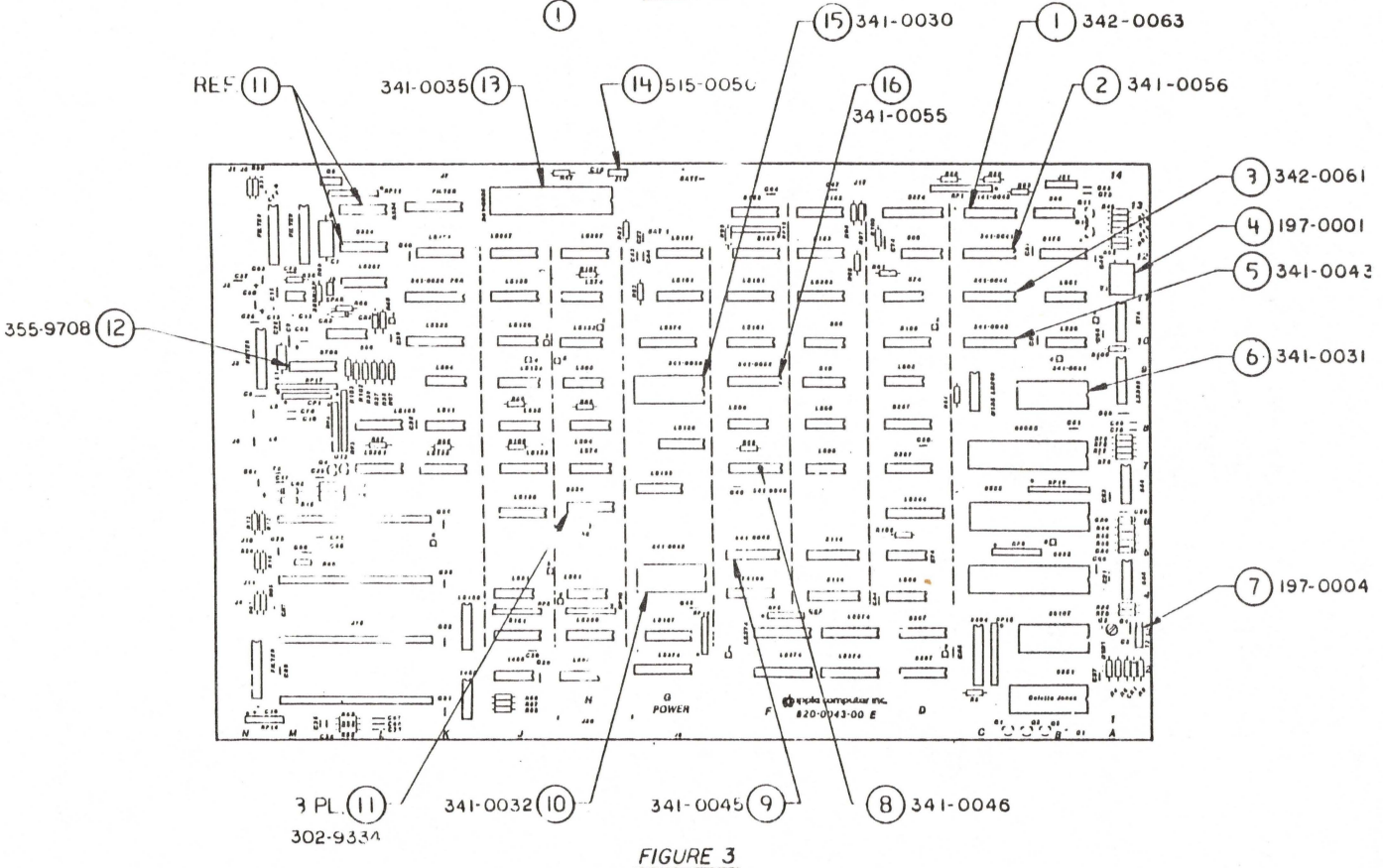

FIGURE 3

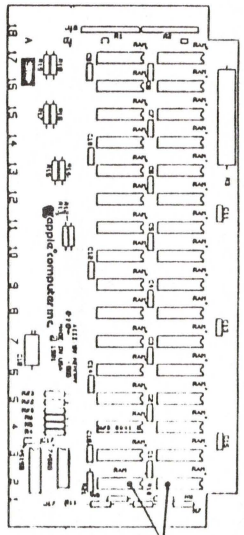

FIGURE 4

APPLE /// and APPLE /// PLUS - UNIVERSAL PARALLEL PRINTER BOARD (Figure 2)

Item	Part No.	Description
1	341-0057	ROM, Parallel Printer Boards
2	590-0128	Cable, Parallel I/F Adapter

APPLE /// and APPLE /// PLUS - LOGIC BOARD (Figure 3)

1	342-0063	IC, PROM CASB256
2	341-0056	IC, PROM CASB65.1
3	342-0061	IC, PROM RAS65
4	197-0001	Crystal, 14.318630 MHz
5	341-0043	PROM, 1024 x 4 U174
6	341-0031	ROM, Boot
7	197-0004	Crystal, Tuning Fork 32.768 KHz
8	341-0046	PROM, 1024 x 4 U180
9	341-0045	PROM, 1024 x 4 U176.2
10	341-0032	ROM, Video Control
11	302-9334	IC, 9334
12	355-9708	IC, 9708 6-CH. 8 Bit A to D
13	341-0035	ROM, Keyboard Encoder
14	515-0050	Three-pin Molex Connector
15	341-0030	ROM Synchrom
16	341-0055	IC, PROM U175-65

APPLE /// and APPLE /// PLUS - MEMORY BOARD (Figure 4)

1	334-0003	IC RAM 64K 200NS w/ Logo

Pictures of the following keyswitches and accessories can be found in **Appendix A:**

705-0009	Reset Keyswitch
705-0012	Arrow Keyswitch
705-0015	Alps Short Stem Keyswitch
705-0070	Alps Long Stem Keyswitch
705-0077	Alps Alpha Lock Keyswitch
815-0772	Straight Adapter

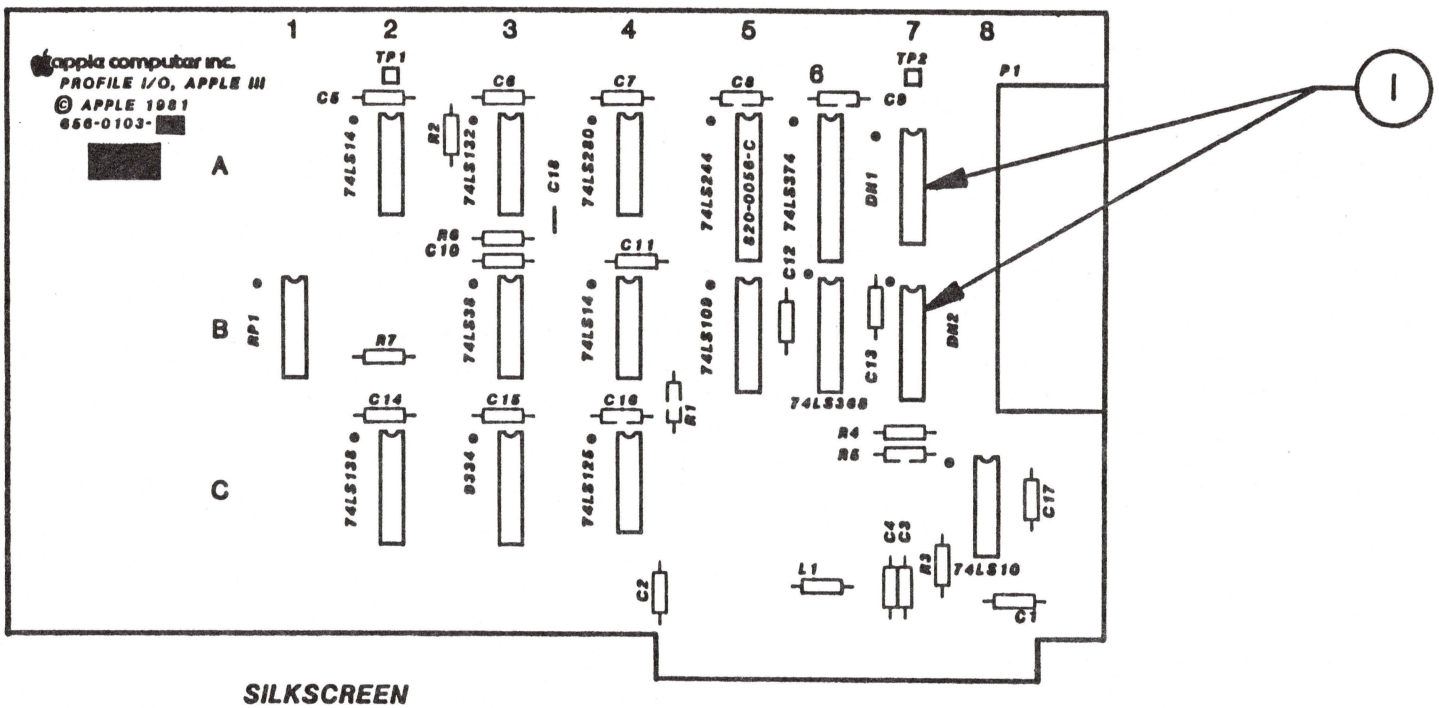

SILKSCREEN

FIGURE 5

APPLE /// & APPLE /// PLUS - PROFILE INTERFACE CARD (Figure 5)

Item	Part No.	Description
	661-92050	ProFile Interface Card
1	112-0107	Resistor Array, 8 x 100 ohms

Apple /// Technical Procedures

Appendix A

Keyboard and Keyswitch Identification

The Apple /// and /// Plus keyboards have different layouts and are not interchangeable. However, many of the keyswitches on both boards are identical.

The keyswitches used for the Apple /// and /// Plus keyboards are the same, except that the Apple /// Plus uses only the Alps long stem keyswitch. Keyswitch/Keyboard information for the Apple /// can be found in Figure 1, page A.2. Keyswitch/Keyboard information for the Apple /// Plus can be found in Figure 2, page A.3.

NOTE: The procedure to replace a keyswitch is in Section 3 of "You Oughta Know...".

FIGURE 1: Apple III Keyboard

Keyswitch	Keyboard
 Datanetics (Obsolete)	Service Part Number of Apple III Keyboard: 661-91022
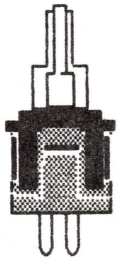 705-0070 Alps Long Stem ("Extended")	 815-0772 Straight adapter 705-0015 Alps Short Stem Used with adapter 815-0772
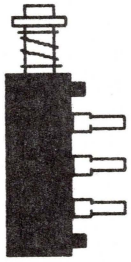 705-0009 Reset	 705-0077 Alps Alpha Lock ("Alternate Action")
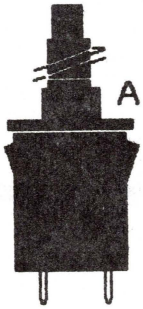 705-0012 A /// Arrow Keys (Cursor Keys) ("dual action," i.e. two-speed) Current Version	 Old Version (Obsolete)

FIGURE 2: Apple III Plus Keyboard

Keyswitch	Keyboard
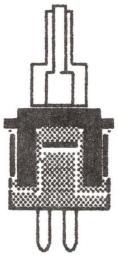 705–0070 Alps Long Stem ("Extended")	Service Part Number of Apple III Keyboard: 661–95127
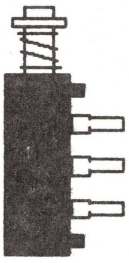 705–0009 Reset  705–0077 Alps Alpha Lock ("Alternate Action")	
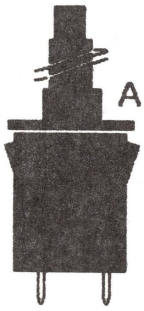 705–0012 A /// Arrow Keys (Cursor Keys) ("dual action," i.e. two–speed)	

Apple Service Certification Course

System Troubleshooting

Apple III Procedures

❑ MATERIALS REQUIRED

Apple Service Technical Procedures binders
Apple III Diagnostic Diskette (III only)
Apple III Plus Dealer Diagnostic diskette
Business Basic diskette for testing printing
Expendable copy of the *System Utilities*
Demo diskette for intermittent failures
Apple II Emulation diskette
Latest disk drive diagnostic program
Write-protected diskette
Write-enabled diskette

❑ PROCEDURE

CAUTION: *If the customer complains about disk drive problems—perhaps the drive is destroying disks or will not boot known-good software—test the system with* ***expendable software only*** *(such as* ***copies*** *of Apple III System Utilities). Remember, at this point the disk drive is an unknown quantity and may destroy any software you attempt to use.*

Remember: Always turn the power **off** before installing or removing anything from **inside** the computer.

Note: Intermittent problems on the Apple III (occasional system failures, freezing of the screen, etc.) can be almost impossible to locate. Check the cables for wear and crimping, and swap them. Remove and reseat the memory board on the logic board. If the Apple III is still under warranty, replace the customer's logic and memory board (including RAM) with exchange modules.

1. Verify that *all* equipment is correctly installed and connected. Verify that the software used is a known-good copy. Pay special attention to:

   a) **Software:** Is it known-good and expendable? Does it work on a known-good system?

   b) **Drive problems:** Are drive cables installed correctly?

   c) **Printer problems:** Is printer cable the correct one? Are printer DIP switch settings correct? Is ribbon installed? Is the cover on correctly?

      Is the device driver present on the software and configured correctly (Apple III)?

      See Appendix B, "Printer Configuration" for more information.

   If any of the above corrects the problem, go to Step 7.

2. Try **Quick Fixes.**

   a) **If there is no video, you may have a video problem:** Try swapping the video cable. Adjust the monitor (contrast, etc.).

   b) **If it won't print, you may have a printer problem:** Try swapping the printer cable(s).

   c) **If there is no power, you may have a power problem:** Try swapping the power cords.

   If any of the above seem to correct the problem, go to Step 7.

3. Isolate the problem to one unit (computer, external drive, monitor, or printer). First, verify that the computer is working:

   a) Remove **all** the customer's peripherals (monitor, external drives, or printer) and any interface cards from the system.

   b) Connect a known-good monitor.

   c) Attempt to boot expendable software.

If it **does boot**, run the correct diagnostics (III or III Plus) for the system according to the *Apple Service Technical Procedures*.

If it **does not boot** use the *Apple Service Technical Procedures* (Troubleshooting section) **or** the chart for the III and/or III Plus on page 6, to isolate the problem to module level (logic, memory, power supply, and internal drive). If the problem is the internal drive, use the chart on page 7 to isolate the drive problem to module level.

Replace the bad module with a known-good exchange module, and run the diagnostics.

If it **passes,** continue on to Step 4.

If it **fails**, use the *Apple Service Technical Procedures* to assist you in exchanging the defective module. Continue to Step 4 once it passes the diagnostic.

4. Verify that the customer's monitor is functioning:

   a) Remove the **known-good** monitor and replace it with the customer's monitor.

   b) Boot an expendable diskette.

If the **video is okay**, go to Step 5.

If the **video is not okay**, use the *Apple Service Technical Procedures* to make the necessary adjustments or exchanges on the monitor.

5. Verify that the customer's external drive is functioning:

   a) Connect the customer's external drive to the drive port.

   b) Boot the *Apple II Emulation* diskette on the internal drive; then insert the disk drive diagnostic program and press <RETURN>.

   c) Run the drive tests.

If it **passes**, continue to Step 6.

If it **fails**, use a known-good external drive and run the tests.

If it **passes** with the known-good drive, use the chart on page 7 to isolate the problem on the **customer's** drive (analog, mechanical assembly, and cable). If it **fails** with a known-good drive, use the *Apple Service Technical Procedures* and exchange the logic board in the Apple III or III Plus. Repeat test until it passes.

6. If the customer has a printer, do the following:

   a) Run the self-test on the printer referring to the appropriate *Apple Service Technical Procedures*.

   b) Verify that the DIP switches on the printer are set correctly and that the correct cable and port are being used. See Appendix B, "Printer Configuration."

   c) Using the information given in Appendix C, "Printer: Testing the Connection," attempt to print from the computer.

   If it **prints**, go to Step 7.

   If it **does not print,** exchange the following modules with **known-good** modules in the order given below, testing after each exchange by using the short program in Appendix C, "Printer: Testing the Connection." Leave the known-good items installed until the printer is functioning correctly.

   d) Connect known-good printer cables to the printer port, and verify that the correct Driver Configuration is installed on the *Business Basic* diskette. If it **does print**, replace the cables and go to Step 6. If it **does not print**, continue to Step e.

   e) Connect a known-good printer (verify correct DIP switch settings) and interface card (if parallel). If it **does print**, see **Note** below. If it **does not print**, recheck all settings and cable connections. If they are correct, continue to Step f.

   f) Swap in a known-good Apple III. (If an Apple III is not available, exchange the logic board.) If it **does print**, replace the logic board in the customer's computer and return to Step 6. If it **does not print**, recheck all settings and cable connections and try again with all of the known-good equipment.

Note: Once the printer is functioning correctly, reverse the process by replacing the known-good items you installed with the customer's items, one at a time, testing after each replacement. When the failure reoccurs, replace the bad item with an exchange module.

7. Run complete diagnostics on the entire system.

   Note: If an intermittent problem was reported and you were not able to duplicate or locate it, run a continuous test for four to five hour (overnight would be better) and attempt to duplicate the problem again before returning the system to the customer.

TROUBLESHOOTING TO THE MODULE LEVEL ON THE APPLE /// OR /// PLUS

CHECK RESULTS BY ATTEMPTING TO BOOT A SYSTEM UTILITIES DISKETTE AFTER EVERY STEP. IF IT BOOTS GO TO STEP 8 ON THIS CHART. REFER TO THE LEVEL I TECHNICAL PROCEDURES AS NEEDED FOR REMOVING AND REPLACING MODULES.

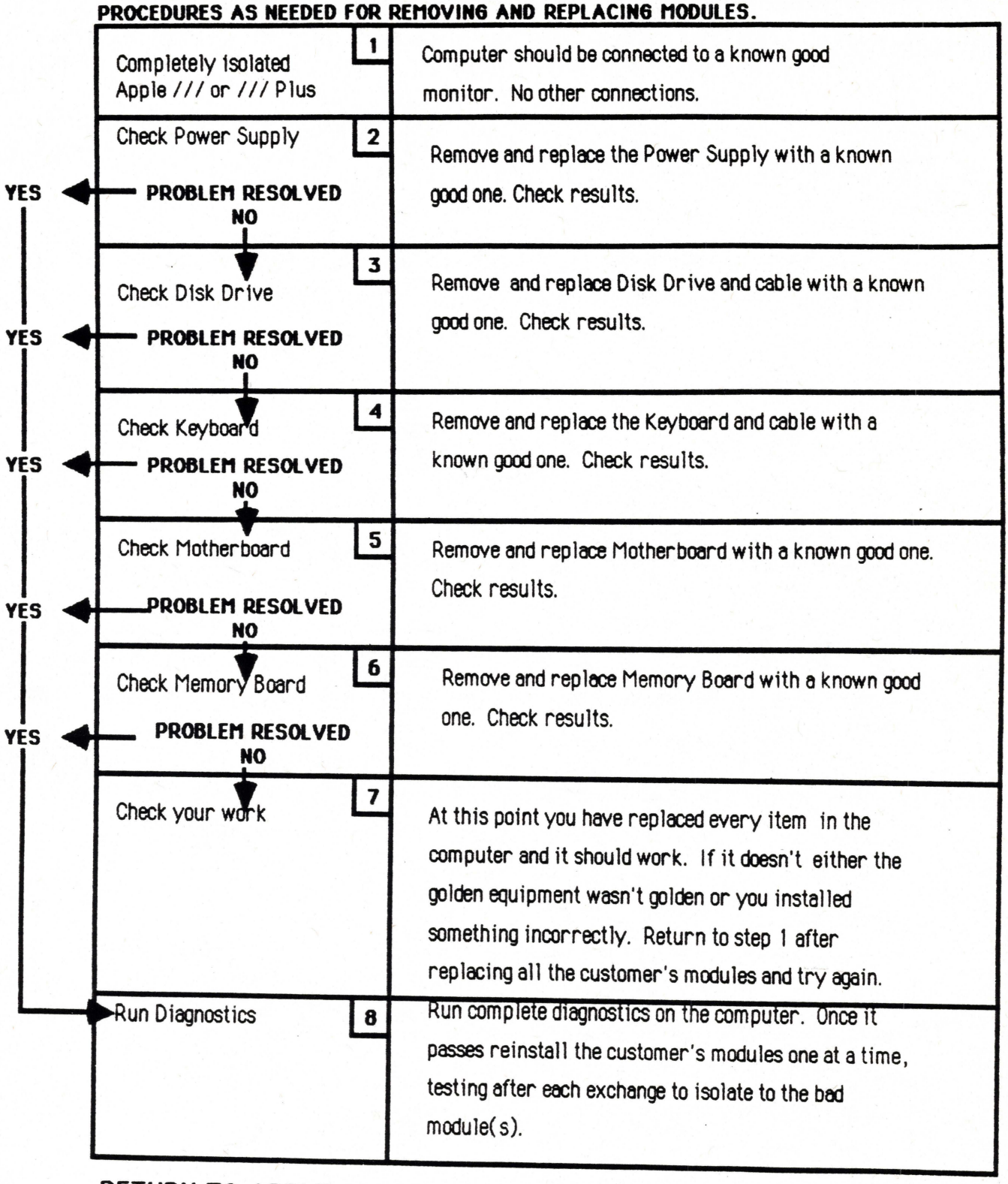

RETURN TO APPLE /// OR /// PLUS SYSTEM TROUBLESHOOTING STEP 3 AND CONTINUE

TROUBLESHOOTING TO THE MODULE LEVEL ON THE DISK ///

CHECK RESULTS BY ATTEMPTING TO RUN THE DRIVE ACCEPTANCE PROGRAM ON DRIVE 2 AFTER EVERY STEP. IF IT BOOTS AND PASSES GO TO STEP 7 ON THIS CHART.

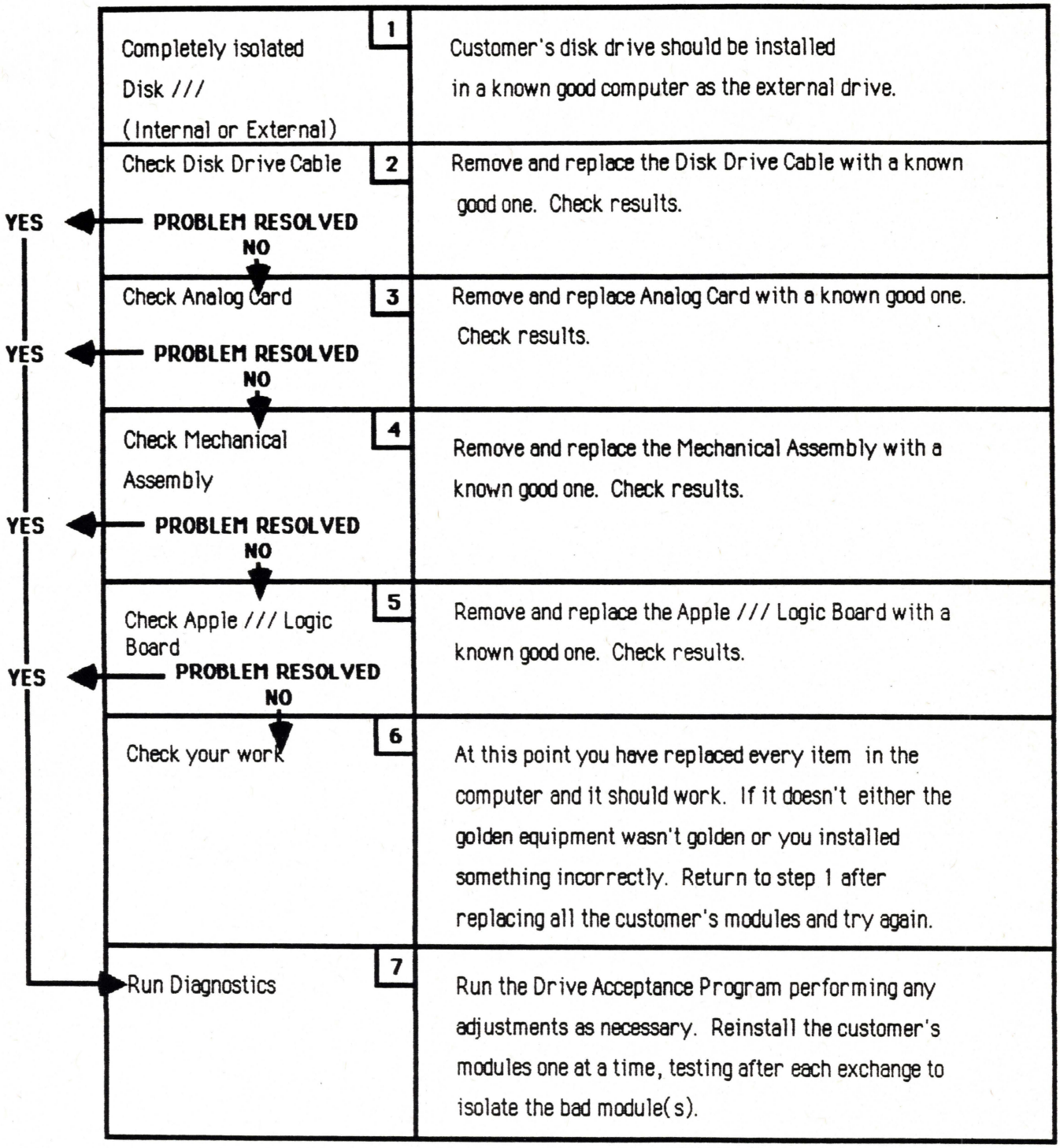

RETURN TO APPLE /// OR /// PLUS SYSTEM TROUBLESHOOTING STEP 3 IF IT WAS AN INTERNAL DRIVE (OR THE /// CHART) STEP 5 IF IT WAS AN EXTERNAL DRIVE AND CONTINUE

End of Apple iii/iii+
section start of Apple ii/e
section

APPLE IIe TECHNICAL PROCEDURES

TABLE OF CONTENTS

Section 0 - Apple IIe Service Notes

Identification - Rev. A, Rev. B, and Enhanced.....0.6
Exchanges of Old Revision A Logic Boards.....0.6
Compatibility of ProFile Interface Cards.....0.7
Case and Keyboard Changes.....0.7

Section 1 - Take-Apart

Opening and Replacing the Case.....1.2
Removing and Replacing Peripheral Cards and Disk Drive Cables.....1.2
Removing and Replacing the Housing.....1.5
Removing and Replacing the Motherboard.....1.8
Removing and Replacing the Keyboard.....1.9
Removing and Replacing the Power Supply.....1.10

Section 2 - Diagnostics

Diagnostic ROM Card
Introduction.....2.2
Processor and Read Only Memory Tests.....2.3
Random Access Memory Test.....2.3
Character Set Test.....2.4
Keyboard Test.....2.4
Video Tests.....2.5
Loop ROM, RAM, and Processor Tests.....2.5
Speaker Test.....2.5

CONTINUED ON NEXT PAGE

©Apple Computer, Inc., 1985, 1986, 1987.
No part of this document may be reproduced in any form without the written permission of Apple Computer, Inc.

ProDOS, Apple, and the Apple logo are registered trademarks of Apple Computer, Inc.

Section 2 - Diagnostics (Continued)

Apple II Diagnostic Diskette
- Introduction....2.6
- Things to Remember....2.7
- Materials Required....2.8
- Main Menu Selections....2.8
- Choose Tests....2.9
- Options....2.11
- Special....2.12
- Running the Diagnostic....2.12
- Standard Test....2.13
- Customized Test....2.13
- Continuous Test....2.14
- Test Failures....2.15

Section 3 - Troubleshooting

- Introduction....3.3
- Apple IIe Symptom Chart....3.4
- Using the Troubleshooting Flowchart....3.5
- Apple IIe Troubleshooting Flowchart....3.6
- Appendix 3A -
  - Theory of Operation Overview....3A.1

Section 4 - Other Procedures

- Apple IIe Enhancement Kit Upgrade....4.1

Section 5 - Illustrated Parts List

- Finished Goods Assembly, Beige....5.3
- Platinum Case and Extended Keyboard....5.5
- Logic Board....5.7
- ProFile Interface Card....5.7
- Super Serial Card....5.7
- Extended 80-Column AppleColor Card....5.9
- AppleColor Card Cable....5.9
- Power Supply Switch....5.9
- Power Supply....5.9

Section 6 - Memory Expansion Card

Introduction.....6.3
Things to Remember.....6.3
Diagnostics and Troubleshooting.....6.4

Appendix A

Keyboard and Keyswitch Identification.....A.1

Appendix B

Apple II Plus and Apple IIe: Differences.....B.1

Apple IIe Technical Procedures

Section 0

Apple IIe Service Notes

Contents:

Identification - Rev. A, Rev. B, and Enhanced.....0.6
Exchanges of Old Revision A Logic Boards.....0.6
Compatibility of ProFile Interface Cards.....0.7
Case and Keyboard Changes.....0.7

IDENTIFICATION - REV. A, REV. B, AND ENHANCED

If the Apple IIe contains a Rev. A unenhanced logic board, it MUST be upgraded to a Rev. B unenhanced BEFORE the Apple IIe Enhancement Kit can be installed.

Use the following chart to identify what version of the Apple IIe logic board the customer has.

	Rev. A	Rev. B	Enhanced
Manufacturing Number (last two digits and revision letter)	64-A	64-B	87-A
Microprocessor at B4	6502	6502	65C02
Date on the board	1982	1982	1984
Heading at top of of monitor on power up	Apple II	Apple II	Apple IIe

See **Section 4 - Other Procedures** for more information on what this enhancement does.

EXCHANGES OF OLD REVISION A LOGIC BOARDS

Apple has been upgrading Apple IIe Logic - Rev. A (1982) logic boards with Rev. B logic boards over the last year. Apple's supply of Rev. A boards was recently sold in bulk to Value Added Resellers (VARs). The VARs purchased the boards "as is," under the condition they would assume complete responsibility for support of the product.

Each Rev. A logic board that was sold to a VAR can be recognized by the following markings:

Component Side: "VAR" is stamped on the right-hand upper third of the board, just below the expansion slots.

Solder Side: "VAR" is stamped in the left-hand lower corner of the logic board.

The Rev. A logic boards with the VAR stamp are not eligible for Apple's exchange module program.

COMPATIBILITY OF PROFILE INTERFACE CARDS

Apple IIe ProFile Interface Cards, which are service stock inventory, may require a chip change to make them compatible with both 5 and 10 MB ProFiles. The interface cards containing EPROM 342-0271 at location D2716-1 only work with the 5 MB ProFiles. If a 10 MB ProFile is to be used, the EPROM should be replaced with EPROM 342-0299.

CASE AND KEYBOARD CHANGES

The Apple IIe has had some minor changes made. They are now being shipped with a platinum case and the Apple IIe Extended Keyboard (the keypad is built-in). There were no major changes made to the logic board circuitry so it is fully compatible with all previous logic boards.

Apple IIe Technical Procedures

Section 1

Take-Apart

Contents:

Opening and Replacing the case.....1.2
Removing and Replacing Peripheral Cards
and Disk Drive Cables.....1.2
Removing and Replacing the Housing.....1.5
Removing and Replacing the Motherboard.....1.8
Removing and Replacing the Keyboard.....1.9
Removing and Replacing the Power Supply.....1.10

Note: Different versions (revisions) of the motherboard are mounted in different ways to the base. This module will show you only one mounting, but it should be easy to adjust to the others. All other instructions apply to all revisions of the motherboard.

There are also differences between the backplates. The later Apple IIe's do not require clamps for the disk drive cables or nutplates for the DB connectors.

The keyboard is attached to the upper housing in the new version of the Apple IIe case. (In earlier versions, the keyboard is attached to the base.)

For these procedures you will need:

Phillips head screwdriver
Flat blade screwdriver
Wrench (p/n 919-0007)

A. OPENING THE CASE

1. Power down and disconnect the power cord.

2. Remove Apple lid.

3. Touch the power supply to release any static build-up.

B. REMOVING AND REPLACING PERIPHERAL CARDS AND DISK DRIVE CABLES

Removing Peripheral Cards and Disk Drive Cables

1. Remove the disk interface card from slot 6.

2. Unplug the disk drive cable connectors from the interface card.

3. To remove the disk drive cable from the back panel, remove the two Jack screws from the clamp (See Figure 1), slide the cable out of the clamp (See Figure 2), and pull the cable out of the opening in the back panel.

FIGURE 1

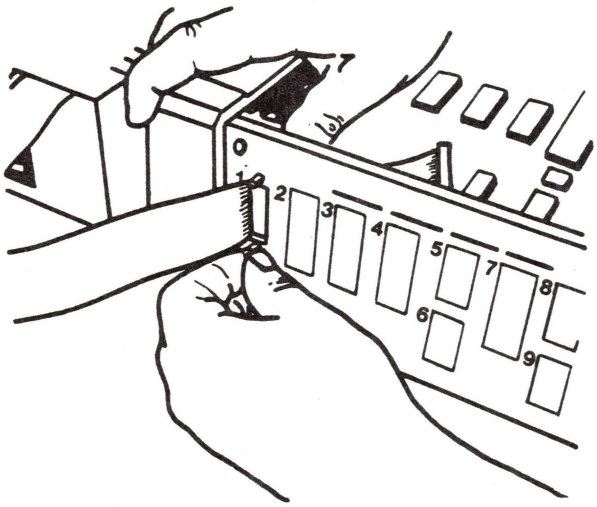

FIGURE 2

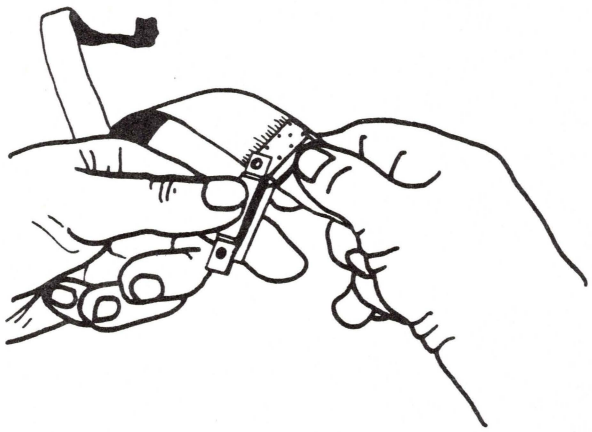

Replace Disk Drives Cables

1. Slide the disk drive's cable through the lowest numbered opening of the back of panel.

2. Take hold of the cable and bend the flap away from the connector. Hold the flap against the cable with your thumb.

3. Hold the clamp in your other hand so the side with the raised section is under your thumb and the opening in the clamp is pointing up (See Figure 3).

FIGURE 3

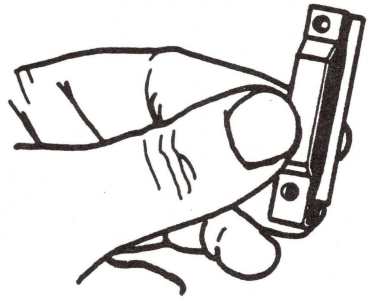

4. Slide the cable and folded over metal flap into the clamp so that the flap is pressed against the cable and sandwiched between the two sides of the clamp (See Figure 4).

   NOTE: You may have to spread the clamp open slightly to make room for the flap.

FIGURE 4

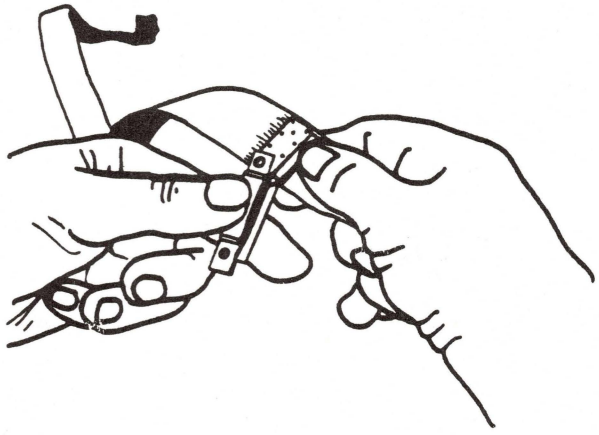

5. Feed the cable back through the opening until the clamp touches the back panel. Push the clamp against the back panel so that the raised section fills the opening and the two round nuts that are affixed to the clamp are facing you (See Figure 5).

NOTE: In order to arrange the clamp so it's flat against the back panel, you may have to bend the cable into an "L" shape at the drive side of the clamp.

FIGURE 5

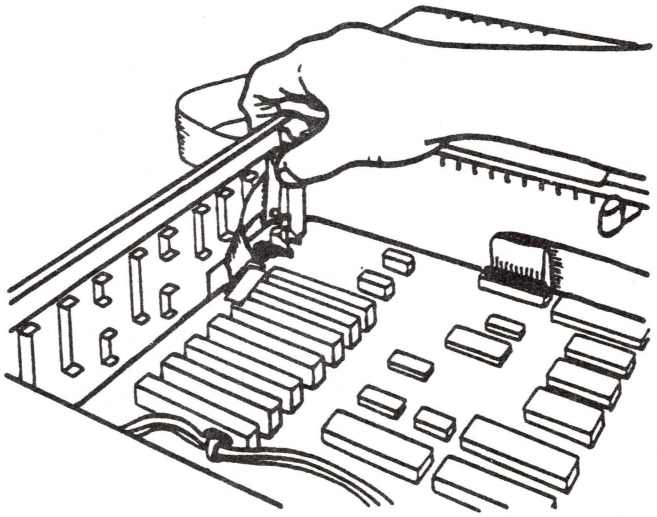

6. Hold the clamp against the opening with one hand. Reach behind the computer with the other hand and install the two screws through the two slots on the top and bottom of the opening and into the nuts on the clamp.

7. Plug the disk drive cable connectors into the interface card.

8. Insert the disk interface card into slot 6.

C. REMOVING AND REPLACING THE HOUSING

1. Open the case (Section A, p.1.2) and remove the peripheral cards and disk drive cables (Section B, p.1.2).

   NOTE: On the new version of the Apple IIe case, the keyboard is attached to the upper housing (rather than to the base). Before the housing can be separated from the base, the keyboard ribbon cable must be disconnected from the motherboard.

2. Turn the Apple upside down resting the keyboard on a protective pad.

3. Remove the ten round head screws from the periphery of the base (See Figure 6, #1). (**Note:** The new Apple IIe case has only nine screws.)

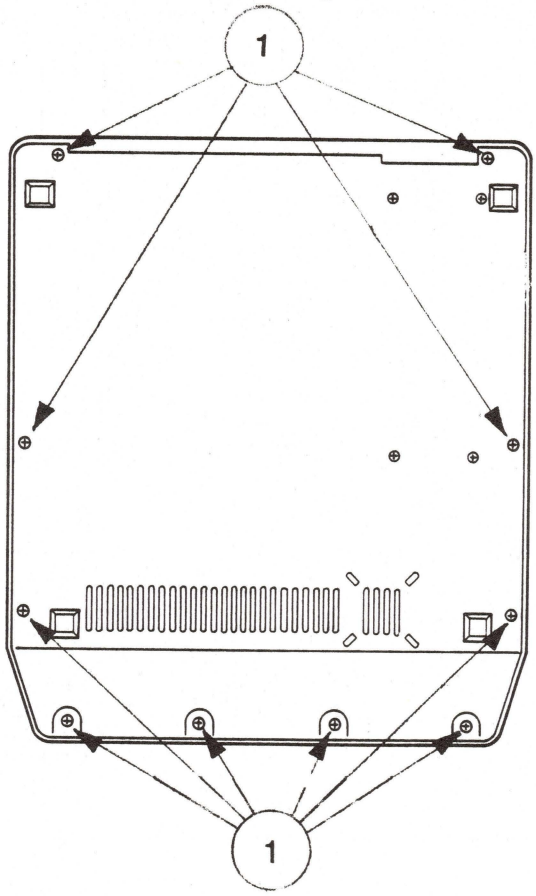

FIGURE 6

4. Turn the computer right side up.

5. Remove the two screws that are in the upper right and left corners of the back panel. (These two screws are absent in the new case.)

6. To free the housing on older versions, push back on the thin metal back plate until is is free from the horizontal bar which is part of the housing (See Figure 7, #1). Gently lift the housing off the base.

NOTE: In the new case, the metal back plate nests into the horizontal bar running across the back of the upper housing. Since the horizontal bar forms a cap over the back plate, the upper housing is freed by lifting straight up.

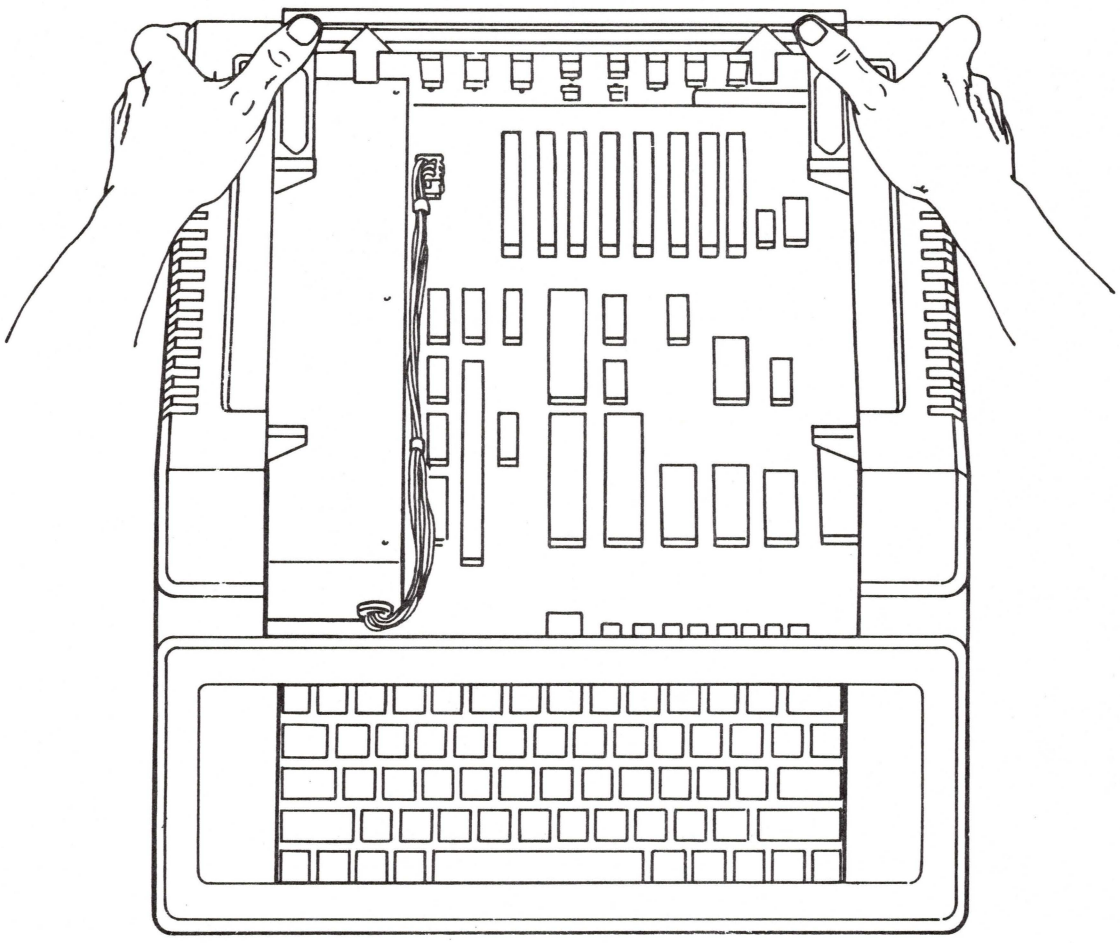

FIGURE 7

Replacing the Housing

1. Slide the housing over the base. For replacing older cases, flex the back metal plate backwards to ease it over the back plastic bar of the housing. It is not necessary to flex the metal back plate of the new case version -- simply settle the upper housing over the base, making sure the end of the keyboard ribbon cable is inside the case area.

   NOTE: On the older case versions, be sure the keyboard cable remains in the box, is properly folded, and is lying flush against the outside of the keyboard stand. Also, be sure the keyboard sits freely in the housing. In particular, check the reset key to see that it does not stick after it has been pressed down.

2. Turn the computer upside down, resting the keyboard on the protective pad.

3. Replace the ten (or nine) screws that attach the housing to the base.

   NOTE: When replacing the screws put in all of them partway, and then, starting from front to back, secure them tightly.

4. Turn the computer right side up.

5. For older case versions, replace the two screws in the upper left and right corners of the back panel.

D. REMOVING AND REPLACING THE MOTHERBOARD

Removing the Motherboard

1. Remove the housing from the Apple, (Section C, p.1.5).

2. Pinch the left and right sides of the power supply plug and pull the plug from the top of the motherboard. (See Figure 8, #1).

3. Unplug the speaker connector. (See Figure 8, #2).

4. Remove the keyboard cable. (See Figure 8, #3).

5. Remove the four screws across the back of the motherboard. (See Figure 8, #4).

6. Using a flat blade screwdriver push in on the flanges of the six stand-offs: three across the middle and three toward the front of the motherboard.

7. Carefully slide the board forward; then lift the board up and out.

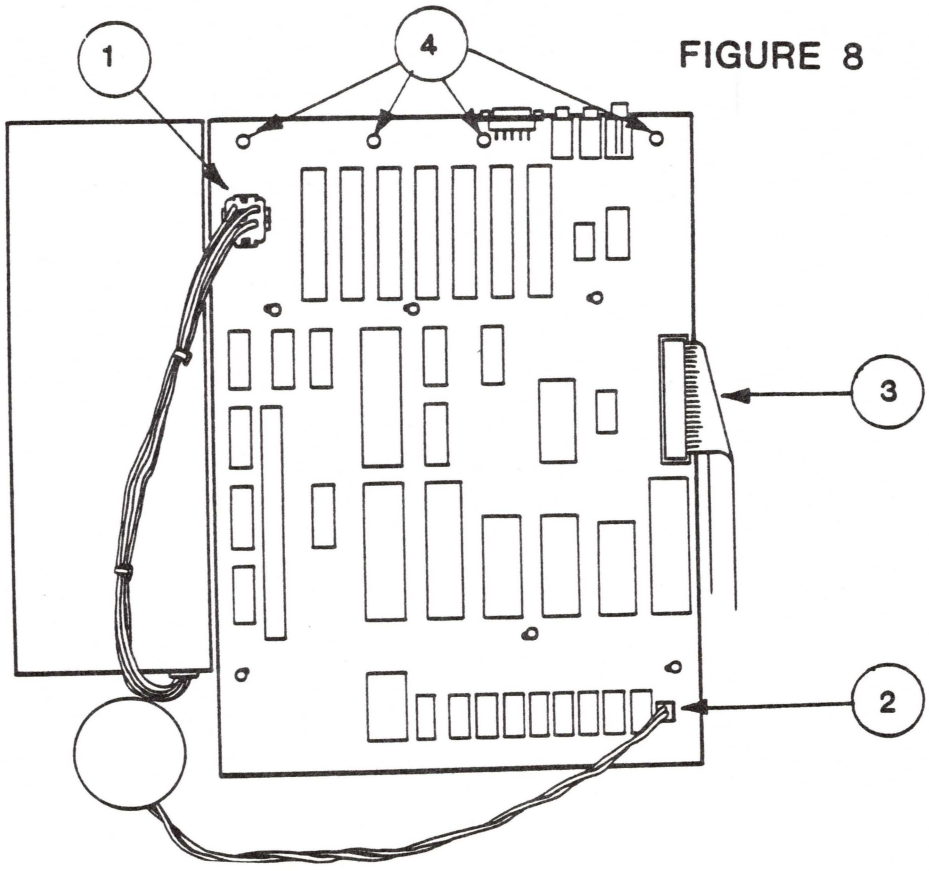

FIGURE 8

Replacing the Motherboard

NOTE: See "Section 0. Apple IIe Service Notes" for module exchange information on all Rev. A Logic Boards.

1. Place the motherboard over the six stand-offs and press the board down into place.

2. Replace the four screws across the back of the motherboard.

3. Plug in the speaker connector.

4. Plug in the power supply.

5. Plug in the keyboard cable.

E. REMOVING AND REPLACING THE KEYBOARD

Removing the Keyboard

1. Remove the housing from the Apple (Section C, p.1.5).

2. Remove the four Phillips head screws which hold the keyboard in place on the keyboard stand.

   NOTE: In the new case version, the keyboard is attached by four Phillips screws to the upper housing, rather than to a keyboard stand on housing base plate.

3. Lift the keyboard free.

Replacing the Keyboard

1. For older case versions, place the keyboard on the keyboard stand. For the new case version, set the keyboard in the upper housing.

2. Replace the four screws to attach the keyboard to the stand (or, in thenew version, to the upper housing).

F. REMOVING AND REPLACING THE POWER SUPPLY

Removing the Power Supply

1. Open the Apple case (Section A, p. 1.2).
2. Unplug the power supply from the motherboard.
3. Set the base on its side.
4. While steadying the base and power supply with one hand remove the four screws with lock washers from the base.
5. Remove base from power supply.

Replacing the Power Supply

1. Align power supply with base.
2. Replace the four round head screws with washers.
3. Turn the base right side up.

Apple IIe Technical Procedures

Section 2

Diagnostics

Contents:

Diagnostic ROM Card
- Introduction.....2.2
- Processor and Read Only Memory Tests.....2.3
- Random Access Memory Test.....2.3
- Character Set Test.....2.4
- Keyboard Test.....2.4
- Video Tests.....2.5
- Loop ROM, RAM, and Processor Tests.....2.5
- Speaker Test.....2.5

Apple II Diagnostic Diskette
- Introduction.....2.6
- Things to Remember.....2.7
- Materials Required.....2.8
- Main Menu Selections.....2.8
- Choose Tests.....2.9
- Options.....2.11
- Special.....2.12
- Running the Diagnostic.....2.12
- Standard Test.....2.13
- Customized Test.....2.13
- Continuous Test.....2.14
- Test Failures.....2.15

APPLE IIe ROM CARD

Introduction

The Apple IIe Diagnostic ROM card is a troubleshooting aid for the Apple IIe. This job aid briefly covers its contents and use.

To use the Diagnostic ROM card, power off the system and remove the Apple lid. Remove any interface cards that are installed and then insert the ROM card in any slot.

Set the red switch on the ROM card so that it slants away from the keyboard.

On power-up, the IIe will boot from the ROM card and automatically display the menu shown below. If this does not happen, check the red switch on the ROM card to see if it is slanting away from the keyboard.

```
Apple IIe Diagnostics
1982 Apple Computer

Enter the Letter of
 the Desired Test

<P>  PROCESSOR TEST
<R>  READ ONLY MEMORY TEST
<M>  RANDOM ACCESS MEMORY TEST
<C>  CHARACTER SET TEST
<K>  KEYBOARD TEST
<V>  VIDEO TESTS
<L>  LOOP ROM RAM AND PROCESSOR TESTS
<S>  SPEAKER TEST


SPACE BAR TO RETURN TO MENU

MICROPROCESSOR IS OK

ROM AT MOTHERBOARD LOCATION D8 IS OK

ROM AT MOTHERBOARD LOCATION D10 IS OK
```

To run a test, enter the letter of the desired test. To exit a test and return to the menu, press the SPACE BAR.

PROCESSOR AND READ ONLY MEMORY TESTS

The Processor and Read Only Memory Tests are executed on powering up the system with the ROM installed. Messages regarding the integrity of the microprocessor and the ROMs are displayed on the last few lines of the menu screen.

Selecting "P" or "R" from the menu will retest the processor and memory. The menu screen is replotted when the test is initiated from the menu screen.

RANDOM ACCESS MEMORY TEST

Each RAM on the motherboard is tested.

The screen clears and alternates three times between two graphics pages and then the screen alternates three times between a graphics page and a blank page.

```
CURRENTLY TESTING MEMORY AT $D000-$FFFF
```

is painted at the top of an otherwise blank screen. The screen then clears and the menu reappears.

If an error is detected a message is displayed in the same format as the following:

```
SUSPECTED FAILURE AT LOCATION F13
SPACE BAR TO RETURN TO MENU
```

The probable motherboard location of the failed RAM in this example is F13. If no errors are found the test returns to the menu screen.

CHARACTER SET TEST

The Character Set Test is largely self explanatory. Four sets of characters are displayed with the line above them describing how they should look.

Note: The characters are in the same order in each set to make it easy to spot a missing or incorrect character.

Failure Indications: If the characters are not as described something is probably wrong with the VIDEO ROM.

Press SPACE BAR to return to the menu.

KEYBOARD TEST

The instructions for operating the Keyboard Test are displayed on the screen upon selection of that option.

The keyboard is represented on the screen. If the characters displayed on the screen do not match those on the keyboard the character Generator IC is probably bad.

You must press each key to test it. As you press the key the corresponding character on the screen will disappear. When you have tested each key (the characters are gone from the screen) press CONTROL-C to return to the menu.

Note:

1. The shift or CAPS key must be depressed to test the alphabetic characters. If you fail to do so the CAPS LOCK key on the lower left of the keyboard representation will flash.

2. The SHIFT and CAPS LOCK keys do not disappear.

3. The tilde "~" and question mark "?" disappear when typed in conjunction with the SHIFT key.

Failure Indications: Keys that bounce will sound an alarm and be highlighted in inverse video. If all or some of the characters cannot be made to disappear from the screen, the key switch of that character's key or the KEYBOARD ROM might be at fault.

Press CONTROL-C to return to the menu after completing the test.

VIDEO TESTS

Both the high and low resolution graphics of the monitor are tested by video tests.

The "lores" (low resolution) test alternates between two identical "lores" graphic pages that have different messages on the bottom of the screen. The graphics should remain constant regardless of the displayed message.

Press SPACE BAR to continue to the "hires" (high resolution) test. The two "hires" pages should be identical except for the "1" or "2" alternating in the upper left corner of the grid.

Failure Indications: Any difference between the two pages would indicate a failure either in RAM or the display mechanism of the high or low resolution graphics.

Press SPACE BAR to proceed from one test to another and to return to the menu from the second test.

LOOP ROM RAM AND PROCESSOR TESTS

This test is a continuous successive execution of the first three tests listed on the menu.

It is useful in finding intermittent ROM, RAM, and processor problems.

Press SPACE BAR to return to the main menu.

SPEAKER TEST

The speaker test does what is says it does. That is, it plays five tones incrementing from low to high. If this does not occur the failure is in either the speaker or the motherboard.

APPLE II DIAGNOSTIC DISKETTE

Introduction

This section describes general procedures for using the 3.5 or the 5.25-inch Apple II Diagnostic Diskette on the Apple IIe. This diagnostic allows you to select the tests you wish to run and the order in which you wish to run them. It also allows you to run a continuous test and keep a record of any error codes which may occur. This will prove valuable for pinpointing problems that cause intermittent failures.

> **NOTE:** On the unenhanced IIe, this diskette will produce strange characters and screens, due to the use of MouseText in the programming of the diagnostic. You can use the ROM card or the diagnostic on the unenhanced Apple IIe.

Read **Things to Remember** before you run the diagnostics. It will give you specific hints for using the diagnostic.

Before attempting to boot the diskette-based diagnostics, run the built-in diagnostics. To run them, hold down the <Open-Apple> and <Closed-Apple> keys while turning on the power. (To run them if the power is on, hold down <Control>, <Open-Apple>, <Closed-Apple>, and <Reset>. Release <Reset> first, then the other keys.)

The screen will display various patterns for approximately one minute. The RAM, ROM and other components on the logic board are being tested.

The results are displayed in the lower left hand corner of the screen. "System Good" is accompanied by a high-toned beep, "System Bad" by a low-toned beep.

If you can access the built-in diagnostics and you receive the message "System Good," connect a disk drive and continue with this section.

If you cannot access the built-in diagnostics or if you receive the message "System Bad," exchange the keyboard or logic board and try again.

Things to Remember

1. Make a backup diskette before beginning! When testing a defective Apple IIe it is possible to erase and/or damage a section of the diskette. The System Utilities diskette (Rev. 2.1 or higher) is used for making a backup copy. Follow the instructions in the **System Utilities Manual.**

2. When loading or saving selected test sequences to diskette, use only a known-good system and disk drive.

3. Where input is required to start the next test (after video test, for example), press the <Spacebar>. If you press <Escape> the testing will stop.

4. The standard keyboard is automatically selected on power up. If you have the extended keyboard you must select it.

5. To abort the keyboard test, hold down <Control> and press C.

6. To make a selection, type the letter of the test or use the arrow keys until the selection is highlighted, and then press <Return>.

7. When chosen, the tests display a number (1, 2, 3, etc). This indicates the order in which the tests will be performed.

8. To deselect a test, type the letter of the test or use the arrow keys until the selection is highlighted; then press the <Delete> key. The numbers displayed will be corrected automatically. To deselect all tests, hold down <Open-Apple> and press <Delete>.

9. To access the Help screen, hold down <Open-Apple> and <Shift> and press ?.

10. For information on testing the Memory Expansion Card, refer to **Section 6, Apple II Memory Expansion Card.**

11. When running the Character Generator Test and using a ColorMonitor IIe or Composite Monitor IIe, the video display shifts left and right and toggles between color and monochrome. (This is the normal result of the method used to display the Character Set Test.)

    To make the display easier to view, depress the White Only switch during the Character Generator Test, and release the switch during all other tests.

Materials Required

Apple II Diagnostic Diskette (5.25 or 3.5)
Extended 80 Column Card
Known-good 5.25 or 3.5 Disk Drive (UniDisk, DuoDisk, Drive II)
Malfunctioning Apple IIe (enhanced or unenhanced)

Main Menu Selections

The Apple II Diagnostic Diskette main menu is shown below.

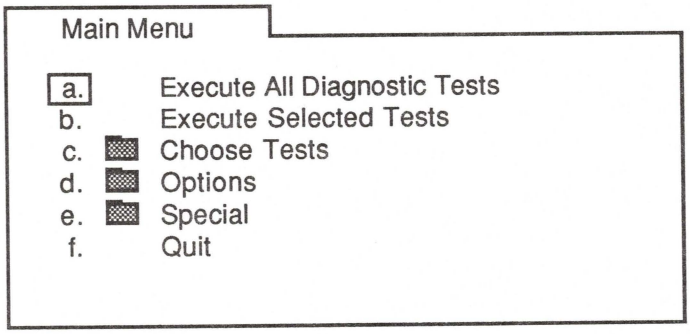

The following list describes each item in the main menu:

Execute All Diagnostic Tests - Runs the standard Apple IIe test sequence.

Execute Selected Tests - Runs the tests selected in **Choose Tests.**

Choose Tests - Contains all the tests that can be selected for the Apple IIe.

Options - Contains various selections that allow you to control how the tests are run.

Special - Contains various options for keeping track of errors generated, for saving a test sequence and for loading a test sequence, from diskette.

Quit - Stops all testing and displays a message to reboot the system.

Choose Tests

The following list describes the items in the Choose Tests folder:

ROM/CPU Test - Checks the ROM and CPU.

System Interrupts Test - Checks that the interrupts are functioning correctly.

MMU/IOU Test - Checks the Memory Management Unit and the Input/Output Unit.

RAM Tests - This folder contains the following:

Main Logic Board RAM Test - Checks the 64K on the logic board.

Extended 64K/80 Column Card RAM Test - Checks the RAM on the Apple IIe Extended 80 Column Card (if installed).

Apple II Memory Expansion Card Test - Checks the RAM on the Memory Expansion Card. The card can be installed in any slot except 3. This test will not run unless selected. Refer to **Section 6, Apple II Memory Expansion Card.**

Disk Drive Tests - This folder contains the following:

Disk Card Test - Checks the drive circuitry on the interface cards for all 3.5- and 5.25-inch drives that are attached to the system. The diskette in each drive to be tested must be formatted with ProDOS.

Sound Tests - This folder contains the following:

Speaker Tone Test - Checks the speaker by playing a sequence of beeps.

Video Pattern Tests - This folder contains the following:

Color Bar Test - Displays vertical color bars with the name of each color below.

Character Generator Test - Displays the character set available.

When running the Character Generator Test and using a ColorMonitor IIe or Composite Monitor IIe, the video display shifts left and right and toggles between color and monochrome. (This is the normal result of the method used to display the Character Set Test.)

To make the display easier to view, depress the White Only switch during the Character Generator Test, and release the switch during all other tests.

80/40 Column Text Test - Displays a few lines of 80 column characters, then a few lines of 40 column characters.

Low Resolution Graphics Test - Displays both pages (one and two) of the low resolution graphics mode with bars at the top of the screen.

High Resolution Graphics Test - Displays a grid of 9 vertical lines intersected by 8 horizontal lines.

Double High Resolution Graphics Test - Displays a grid of 18 vertical lines intersected by 8 horizontal lines.

Keyboard Tests - This folder contains the following:

Standard IIe Keyboard Test - Displays a keyboard layout for the Apple IIe keyboard. The instructions are given at the bottom of the screen.

Extended IIe Keyboard Test - Displays a keyboard layout for the Apple IIe Extended Keyboard (with built-in keypad). The instructions are given at the bottom of the screen.

Language - Displays a list of languages available for the keyboard tests. The default setting is U.S.A. English.

Numeric Keypad IIe Test - Displays a numeric keyboard layout. The instructions are given at the bottom of the screen.

Game I/O Test - This folder contains the following:

Joystick/Paddle Test - Displays a pointer which can be moved around the screen and an alert box which indicates whether the joystick/paddle buttons are pressed or not. If you are testing paddles, verify that both reach the full range (0-FF).

Options

When the Options folder is open, the following list of selections appears on the screen.

Loop Tests Until Esc is Pressed
Continue On Error Until Esc

If an option is selected, a check mark appears beside the item. To deselect an option, just select the same option again.

Special

The following selections appear when the Special folder is opened.

Display Error Log - Displays the names of the tests that have failed since the last clearing of the error log (up to 255 names).

Clear Error Log - Erases the log from RAM.

Clear Testing Status Line - Clears the iterations and failure counts displayed.

Display Current System Status - Indicates the type of system, the ROM version, the amount of memory available (number of banks) and the memory card status.

Load Selected Test Sequence from Disk - Loads a previously saved test sequence. The sequence can then be executed.

Save Selected Test Sequence to Disk - Saves a test sequence you have selected to the test diskette.

When any of the above items is selected and <Return> is pressed, the action is performed.

Running the Diagnostics

The diagnostic can be configured in various ways. All the tests can be run in their automatic sequence, or selected tests can be looped or run in an order you specify.

The diagnostic also has the ability to execute a test selection sequence that has been saved to the test diskette. Saved test sequences make it easier to test an Apple IIe that has an extended keyboard or other specially configured systems.

For information on the Apple II Memory Expansion Card refer to **Section 6, Apple IIe Memory Expansion Card.**

Standard Test

1. Install Extended 80 Column Card in the auxiliary slot.

2. Insert the Apple II Diagnostic Diskette and power on the system.

3. Type the letter a or use the arrows to select **Execute All Diagnostic Tests**, and press <Return>.

   To continue after certain tests (for instance, speaker, video patterns), press the <Spacebar>.

   If an error is encountered, the testing will stop and an alert box will appear specifying which test failed.

4. On completion, the message **Testing finished** will be displayed in the alert box.

Customized Test

1. Install the Extended 80 Column Card in the auxiliary slot. Install the Apple II Memory Expansion Card in any slot except 3.

2. Insert the Apple II Diagnostic Diskette and power on the system.

3. Type the letter c or use the arrows to select **Choose Tests**, and press <Return>.

4. From this menu, select the first three tests (if desired) and press <Return> to select them. Select the other test folders and press <Return> to display them. Select the tests you wish to run from each folder and press <Return> to select them.

   If you wish to deselect a test, use the letters or arrows to select the test and press the <Delete> key.

5. To save your customized test sequence, return to the main menu, and select **Special.** Select **Save Selected Test Sequence to Disk** and press <Return>.

   You now have the selected test sequence saved to diskette. The sequence may be loaded using **Load Selected Test Sequence from Disk** at a later date when it is needed.

6. On completion, return to the main menu, select **Execute Selected Tests**, and press <Return>. To continue after certain tests (for instance, speaker, video patterns), press the <Spacebar>.

   If an error is encountered, the testing will stop and an alert box will appear specifying which test failed.

7. On completion, the message **Testing finished** will be displayed in the alert box.

Continuous Test

A continuous (looping) test is possible with all tests. Select the tests you wish to loop by following the instructions under "Customized Test" (see above). Follow the steps below to run a continuous test.

1. After you have chosen the tests you want to run, return to the main menu, select **Options**, and press <Return>.

2. From the menu, select **Loop Tests Until Esc is Pressed** and press <Return>. A check mark should appear, indicating that it has been selected.

3. Select **Continue On Error Until Esc** if you want to continue looping regardless of the error until <Escape> is pressed.

   If you do not select this option, the testing will halt when an error is encountered.

   Errors will be logged to RAM.

4. Return to the main menu, select **Execute Selected Tests** and press <Return>. The tests will run (depending on your selection in step 3) continuously until an error occurs or <Escape> is pressed.

   If <Escape> is pressed, looping is canceled.

   If you press <Escape> to stop the testing, you can then check for errors by selecting **Special** and pressing <Return>. Then select **Display Error Log.**

5. If you are going to run the continuous test again, be sure to clear the error log and the status line and to reselect **Loop on Error Until Esc is Pressed** before returning to the main menu.

Test Failures

When a test fails, either a message will appear giving the name of the test which has failed, or the test will be listed in the error log.

The following is a list of the tests along with the recommended remedial actions.

Tests	Remedial Action
ROM/CPU	- Exchange logic board.
System Speed/Interrupts	- Exchange logic board.
MMU/IOU	- Exchange logic board.
Main Logic Board RAM	- Exchange logic board.
Extended 80 Column Card	1. Exchange card. 2. Exchange logic board.
Disk Port	1. Exchange drive. 2. Exchange interface. 3. Exchange logic board.
Speaker	1. Exchange speaker. 2. Exchange logic board.
All Video	- Exchange logic board.
IIe Keyboard or IIe Extended Keyboard	1. Exchange cable. 2. Exchange keyboard. 3. Exchange logic board.
Numeric Keypad	1. Exchange numeric keypad. 2. Exchange cable. 3. Exchange logic board.
Joystick/Paddle	1. Exchange joystick or paddles. 2. Exchange logic board.
Apple II Memory Expansion Card	- Refer to **Section 6, Apple II Memory Expansion Card,** for more information.

Apple IIe Technical Procedures

Section 3

Troubleshooting

Contents:

Introduction.....3.3
Apple IIe Symptom Chart.....3.4
Using the Troubleshooting Flowchart.....3.5
Apple IIe Troubleshooting Flowchart.....3.6
Appendix 3A -
  Theory Of Operation Overview.....3A.1

INTRODUCTION

The goal of troubleshooting a system is to get the customer out the door with a functioning system as soon as possible with the lowest cost to the customer. This job aid gives guidelines for troubleshooting the Apple IIe and does not examine the interaction of the Apple IIe with the peripherals, or the peripherals with each other.

One source of information about the trouble is the customer. A customer's description of the problem plus the diagnostics and some quick substitutions can often identify the faulty module within a few minutes. If the customer's description is too vague or doesn't suggest the problem, a few well-chosen questions can give you many hints about the cause of the problem. If the customer just bought a new peripheral, or the system only fails on a new piece of software, the new hardware or software is immediately suspect. The major assemblies involved can then be tested.

Another key to fast and effective troubleshooting of the Apple IIe is the use of the Diagnostic Card. This card plugs into any peripheral slot next to the back panel to automatically perform the tests without using a disk drive. The diagnostics enable you to locate and repair those modules and diagnosable components reimbursed by Apple for warranty repair.

This job aid approaches troubleshooting using the Diagnostic Card, the Apple IIe Symptom Chart and the Apple IIe Troubleshooting Chart. The Symptom Chart describes abnormal responses and the probable causes. The Troubleshooting Flowchart recommends a systematic procedure by which to check the cause of a problem using the tests on the diagnostic card. Use whichever chart best fits your needs.

Apple IIe Symptom Chart

NOTE: Sometimes there will be a 20 to 30 second wait after switching the power switch on. During this time "garbage" might appear on the screen. This might lead you to believe there is a problem with the Motherboard when indeed there is none. To eliminate this problem, hold down the <OPEN APPLE> key when turning the system on.

Symptom	Probable Cause
Programs run erratically, often crash.	1. RAM 2. ROMs 3. Power Supply 4. Motherboard
No beep and no message is displayed; monitor has random characters on screen when the Apple is turned on; drive does not come on.	1. EF ROM 2. RAM 3. Power Supply 4. Motherboard
Keys fail to remove appropriate character from the keyboard test on Apple IIe diagnostic.	1. Keyboard Cable 2. Keyboard 3. Motherboard 4. Keyboard ROM
AppleSoft or Integer BASIC fails to operate or is erratic.	1. CD ROM 2. RAM 3. Motherboard
All video malfunctions. (Graphics and Text)	1. Motherboard 2. ROM 3. RAM 4. Combination 1 through 3
Cassette Interface malfunction.	1. Motherboard
Apple IIe system dead. (No beep, no video, no power light)	1. Power Supply 2. AC power cord 3. Keyboard cable 4. Motherboard
Speaker malfunction.	1. Speaker 2. Motherboard

Symptom	Problem Cause
Diagnostics always run when powered-up	1. Keyboard cable 2. Motherboard 3. Keyboard
The special function keys on the Numeric Keypad do not work properly.	- ROM at E-12 on the mother board (see note below)
Extended 80 column card: system locks up (hangs) intermittently	1. Replace the MMU 2. Extended 80 Column Card 3. Motherboard
Extended 80 column display problem.	1. IC 74LS245 on the Extended 80 Column Card 2. Extended 80 Column Card 3. Motherboard
After exchanging logic board system locks up and/or hisses	- Speaker (wire may be pierced)

NOTE: The special function keys (arrows, return, etc.) on the Numeric Keypad do not work properly when used with an Apple IIe containing a "revision C" character generator ROM. The Revision C ROM (part number 342-0132-C) was first shipped in the Apple IIe after 8/25/84. If you encounter difficulties with the function keys on the Keypad, check to see if the Apple IIe logic board contains the "revision C" ROM at location E-12. If it does, **REPLACE THE CHARACTER GENERATOR ROM** with any other version from service stock (for example, part numbers 342-0132-A or 342-0132-B). **DO NOT REPLACE THE ENTIRE APPLE IIe LOGIC BOARD.**

USING THE TROUBLESHOOTING FLOWCHART

As you go through the Apple IIe Troubleshooting Flowchart, when you come to a rectangle follow the instructions contained within the rectangle. Then proceed to the next letter or figure. Some rectangles contain more than one instruction.

For example in one rectangle you might be instructed to replace RAM, ROM and the Motherboard. The correct procedure would be:

1. Turn the computer's power off.

2. Replace the indicated RAM.

3. Exit from that instruction. In many cases you will return to **C** (circled), which is at the beginning of the flowchart.

4. Proceed through the flowchart.

5. If you again end up at the place where you changed the RAM:

    a. Turn the power off.
    b. Replace the original RAM.
    c. Replace whatever was listed second (ROM).
    d. Exit as before.

If the problem is not solved, continue this procedure until all instructions within that rectangle have been completed. If the problem was not solved the first time you replaced a component make sure you put that component back before replacing another.

CAUTION: Always make sure you turn the computer's power off before replacing any component.

When you come to a diamond, you will be asked a question. The answer to that question will determine the path by which you leave the diamond.

Continue through the flowchart until you have completely checked out the computer.

Apple IIe Troubleshooting Flowchart

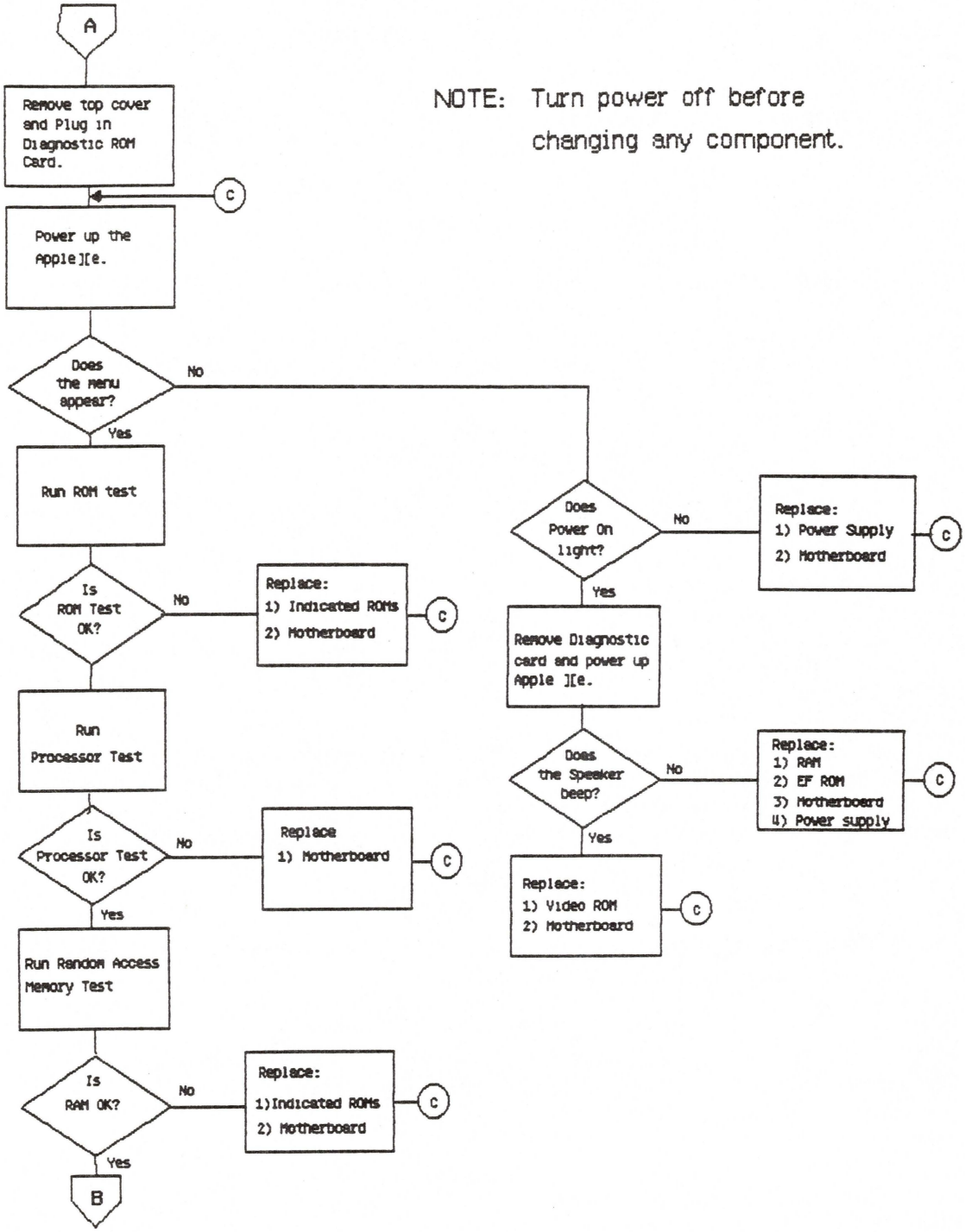

NOTE: Turn power off before changing any component.

Apple IIe Troubleshooting Flowchart
continued

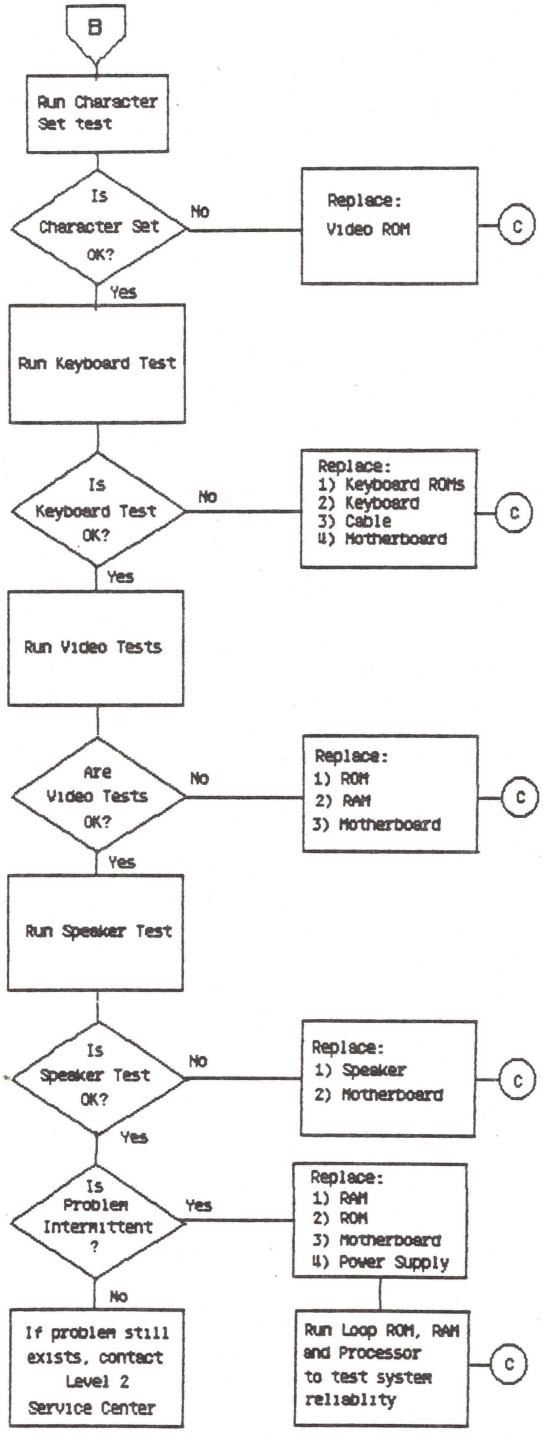

Apple IIe Technical Procdures

Appendix 3A

Troubleshooting

Theory of Operation Overview

Troubleshooting can be approached in many different ways. Apple recommends two methods in particular: logical troubleshooting, and module swapping in a particular order for a particular symptom. Most troubleshooting charts in Apple Technical Procedures manuals are based upon the module swapping method, but you can often save repair time by using logical troubleshooting before you start swapping.

Logical troubleshooting involves knowing the function of each module in the machine, and using that information to narrow down your search for the problem. This section will give you the information necessary to perform logical troubleshooting of the Apple IIe. The information here includes a description of each module in the IIe and the various functions it performs. (For definitions of basic terms, refer to "Simplified Overview of a Microcomputer System" under the tab **You Oughta Know....**)

APPLE IIe MODULES AND FUNCTIONS

Logic Board

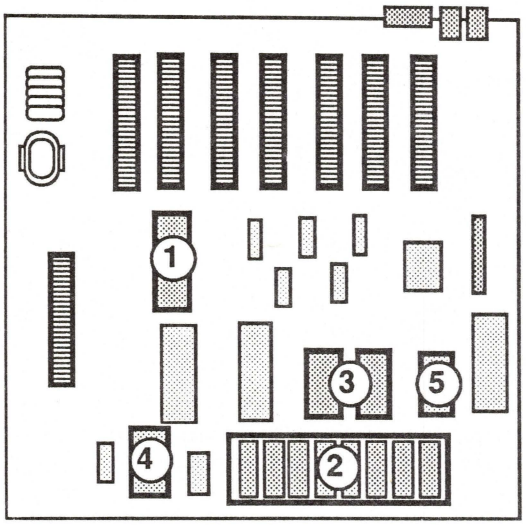

The Logic Board is the heart of the system. It contains the components described below. A number after an IC in the descriptions below corresponds to a number in the figure to the left (indicating the location of the component on the IIe Logic Board). The ICs that have a number are exchangeable.

-- The **CPU (1)**, a 6502 microprocessor, gets instructions from memory, translates them, and carries them out. It communicates with all components on the Logic Board.

  NOTE: The IIe is available in an enhanced version. Refer to the **Module Identification Manual** for specific differences between the enhanced and unenhanced Apple IIe Logic Boards.

-- The **Oscillator** (timing device) provides the master clock pulse for all the ICs on the board.

-- The **RAM (2)** storage capability (on the Logic Board) is 64K. Additional RAM can be added by installing various add-on memory cards.

-- The two **ROMs (3)**, CD and EF, contain the Applesoft editor and interpreter, the Monitor, the 80-column display firmware, and the diagnostic self-test routines.

-- The **character generator ROM (4)** changes the input code into the proper bit patterns for use by the external monitor.

-- The **keyboard ROM (5)** converts the information into the proper code for the computer to use.

-- The seven main slots are used for plug-in cards, which are necessary to interface with external peripheral devices. For example, any disk drive or printer must be connected to the IIe via an interface card which is inserted into one of these slots.

-- There is one additional slot, the auxiliary slot, which is considered slot 3. This slot is reserved for the 80-column card, RGB card or a similar card (the card's manufacturer will specify if the card requires installation in the auxiliary slot).

Power Supply

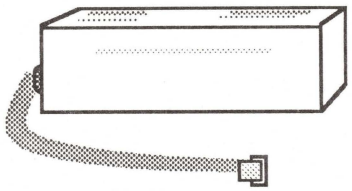

The power supply operates on standard line voltage and outputs various DC voltages, which are used by the Logic Board and by some peripheral devices (for example, Drive II, UniDisk).

Keyboard

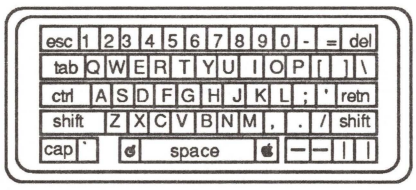

The keyboard information is sent via a cable to the Logic Board in the form of X and Y coordinates. The coordinates are converted by the keyboard encoder and keyboard ROM into a form that the Logic Board can use.

Apple IIe Technical Procedures

Section 4

Other Procedures

Contents:

Apple IIe Enhancement Kit Upgrade.....4.2

U.S. VERSION

FIGURE 1

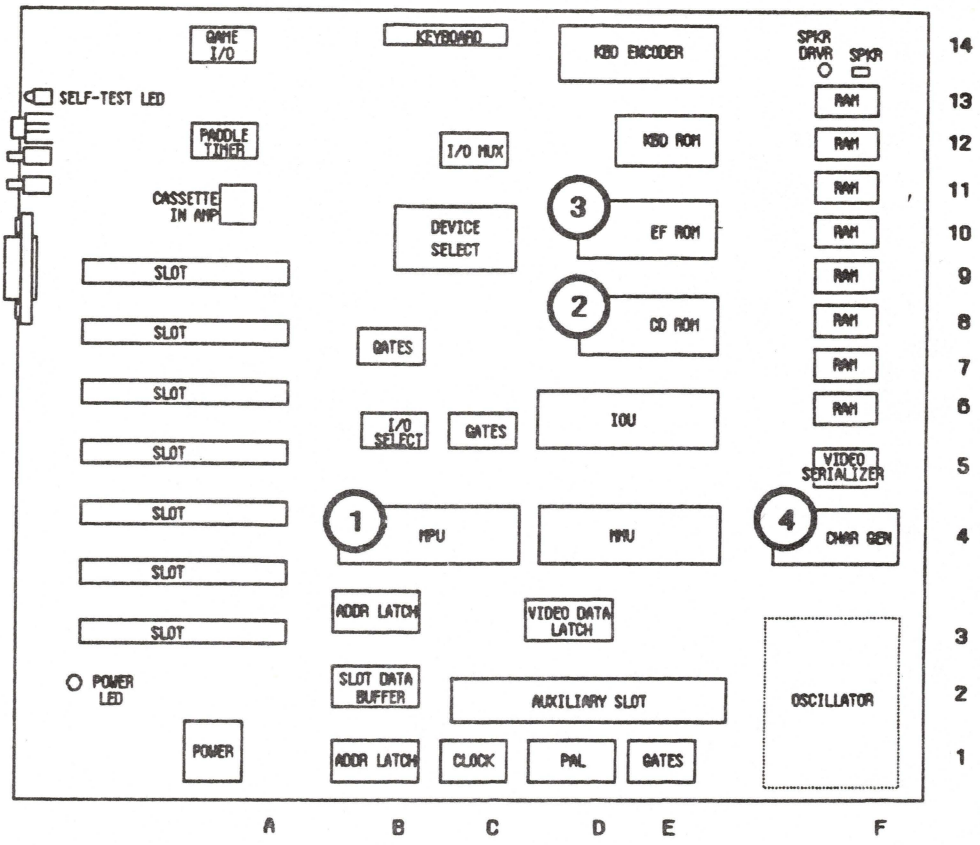

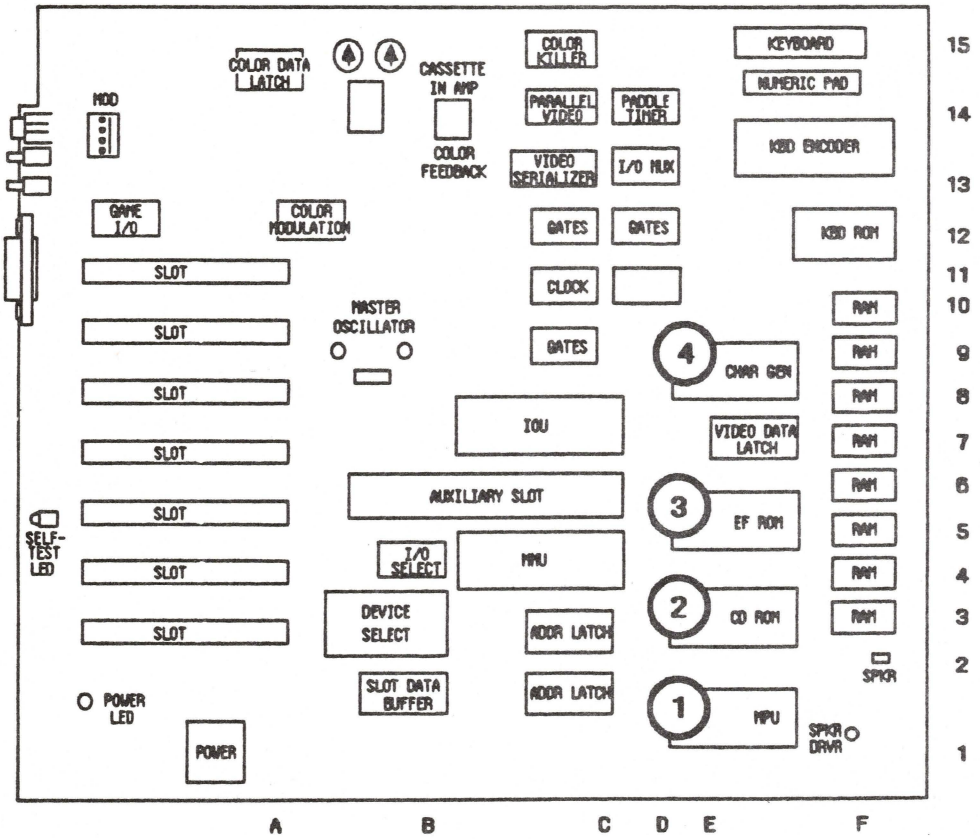

EUROPEAN VERSION

FIGURE 2

Apple IIe Enhancement Kit Upgrade

The Apple IIe Enhancement Kit makes an Apple IIe compatible with the advanced features available on the IIc. It allows the IIe to support interrupts for applications and networking. With the kit, the IIe also gains faster processing time and the ability to use the MouseText character display features.

To upgrade your IIe you will need to replace the following four ICs on the logic board:

1) The 6502 Microprocessor (P/N 370-6502) is replaced by the 65C02 Microprocessor (P/N 338-6503)

2) The CD Monitor ROM (P/N 342-0135) is replaced by the CD Monitor ROM (P/N 341-0304)

3) The EF Monitor ROM (P/N 342-0134) is replaced by the EF Monitor ROM (P/N 341-0303)

4) The Video (Character Generator) ROM (P/N 342-0133) is replaced by the Character Generator ROM (P/N 342-0265)

See Figure 1, page 4.2 for U.S. IIe Logic Board Layout and location of the ICs. See Figure 2, page 4.2 for European IIe Logic Board Layout and location of the ICs.

The numbers above correspond with the numbers on the appropriate layout.

Installation Procedures

WARNING: The four ICs you will be installing are extremely susceptible to static discharge. Before handling these ICs be sure to touch the metal power supply case to discharge any electricity that may have built up on your body or clothing.

1. Power off the IIe system.

2. Remove the cover and all interface cards.

3. **TOUCH THE POWER SUPPLY.**

4. Referring to Figure 1 on page 4.2 (for the U.S. Logic Board), or Figure 2 on page 4.2 (for the European Logic Board) locate the four chips to be replaced.

5. Remove the chips using an IC extractor. For the 6502, use a small, narrow, flatblade screwdriver to gently pry up each end of the IC a little at a time. Be careful that you do not scratch the logic board traces when using the screwdriver.

6. **TOUCH THE POWER SUPPLY AGAIN** to be sure that you are completely discharged.

7. Identify the new chips and remove them from the piece of antistatic foam. Install each chip at the appropriate location.

IMPORTANT: There is a notch at one end of each chip. This notch should face the keyboard on installation.

8. Place the old chips onto the antistatic foam.

9. Replace the interface cards you removed, replace the cover and run a IIc program to verify that the upgrade works correctly.

Apple IIe Technical Procedures

Section 5

Illustrated Parts List

The figures and lists below include all piece parts that can be purchased separately from Apple for the Apple IIe, along with their part numbers. These are the only parts available from Apple. Refer to your Apple Service Programs manual for prices.

Contents:

Finished Goods Assembly, Beige.....5.3
Platinum Case and Extended Keyboard.....5.5
Logic Board.....5.7
ProFile Interface Card.....5.7
Super Serial Card.....5.7
Extended 80-Column AppleColor Card.....5.9
AppleColor Card Cable.....5.9
Power Supply Switch.....5.9
Power Supply.....5.9

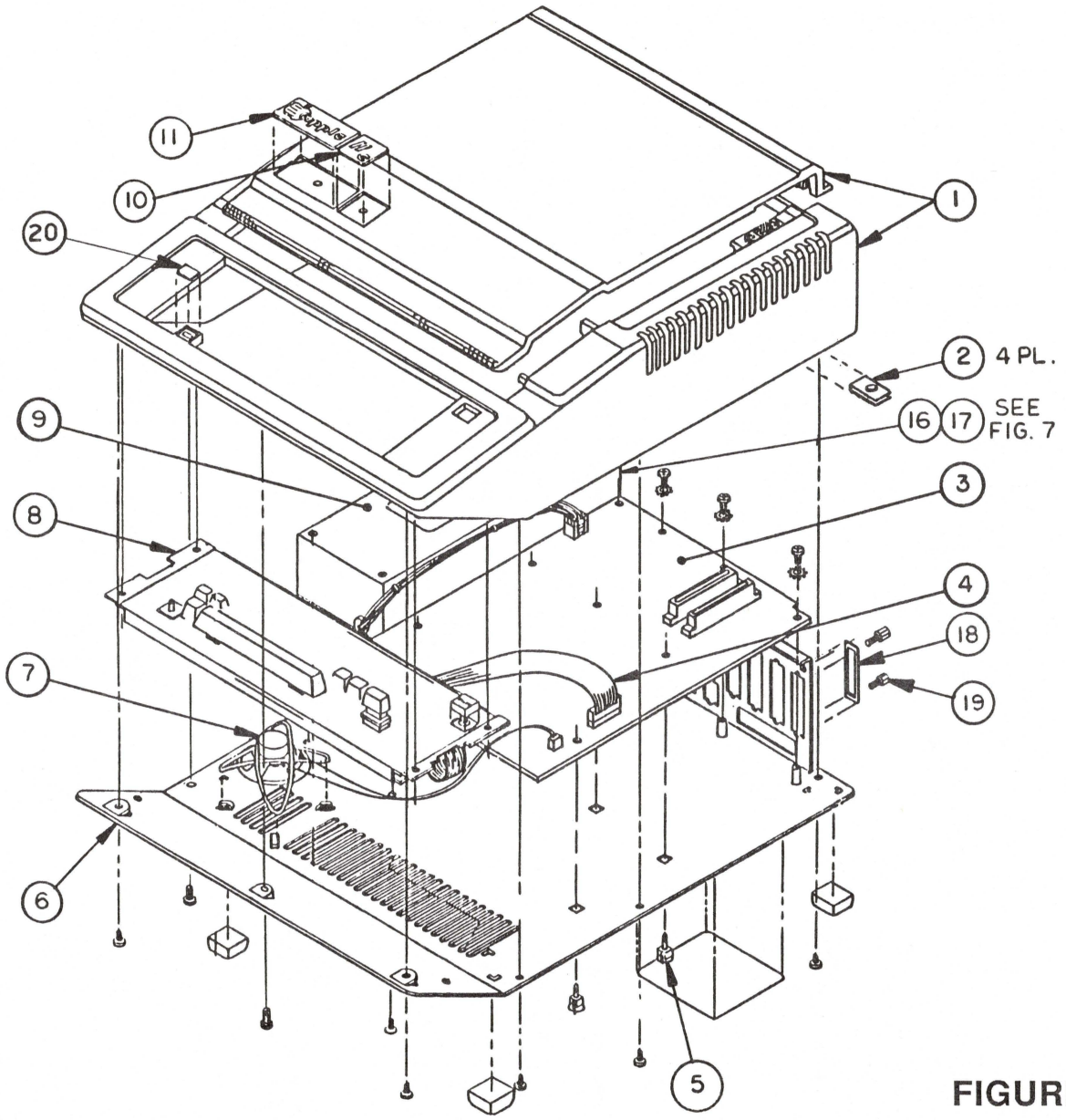
11
10
20
1
2 4 PL.
16 17 SEE FIG. 7
9
3
8
4
18
7
19
6
5

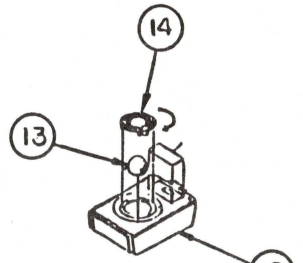
14
13
12
MOUSE
BOTTOM VIEW
SCALE: NONE

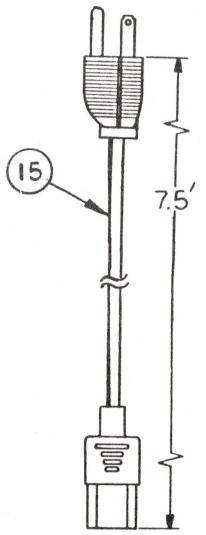
15
7.5'

FIGURE 1

APPLE IIe - FINISHED GOODS ASSEMBLY, BEIGE (Figure 1)

Item	Part No.	Description
1	076-0127	Apple IIe Case & Lid, Beige
2	835-0174	Nut, U-Type
3	661-91084	Apple IIe Logic Board
4	590-0108	Keyboard Cable
5	860-0044	Standoff, Platinum
6	810-0585	Base Pan
7	600-0009	Speaker Assembly
8	661-91085	Alps Long Stem Keyboard
	661-95139	SMK Short Stem Keyboard
	661-95233	SMK Long Stem Keyboard
9	661-91040	Apple II, IIe Power Supply
10	825-0359	IIe Nameplate
11	825-0054	Apple Nameplate
12	661-0259	Apple II Mouse Assembly
	661-0400	AppleMouse, Platinum
13	699-8001	Rubber Coated Mouse Ball
14	815-0409	Mouseball Retainer
15	590-0380	Power Cable, Smoke
16	705-0023	Switch, Power Supply, Rocker, Two Pole
17	705-0065	Switch, Power Supply, Rocker, Three Pole
18	805-0110	Plate, Nut, 25 Pin
19	835-0006	Screw, Hexagon Nut Plate
20	825-0352	Power-on Label

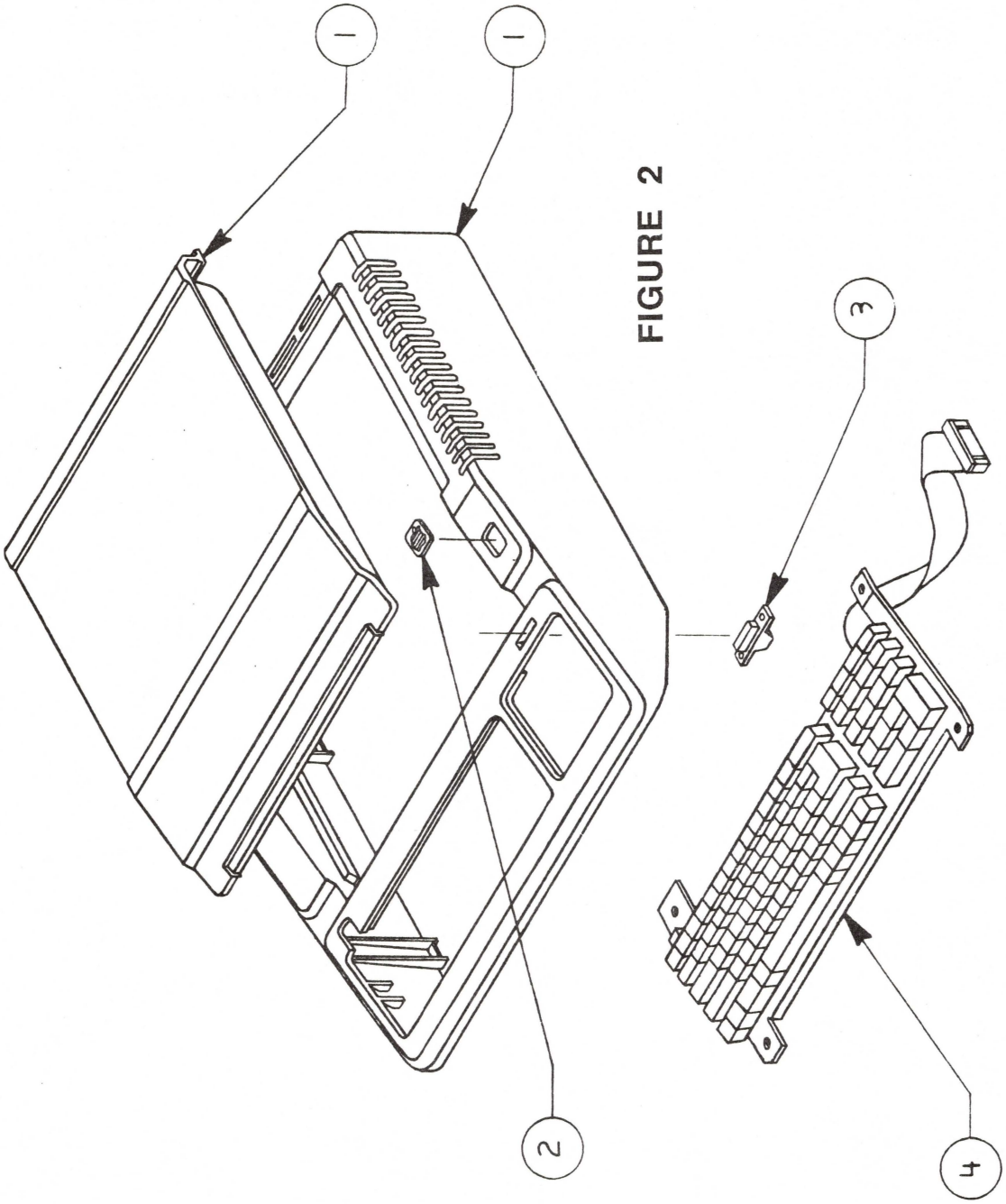

FIGURE 2

APPLE IIe - PLATINUM CASE AND EXTENDED KEYBOARD (Figure 2)

Item	Part No.	Description
1	607-5015	Apple IIe Case & Lid, Platinum
2	825-1340	Logo Label, Platinum
3	815-0586	Power-on Light Pipe
4	661-0357	Apple IIe Extended Keyboard, Platinum

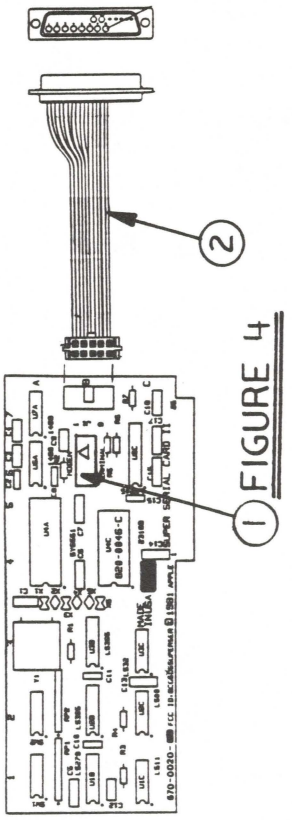

FIGURE 4

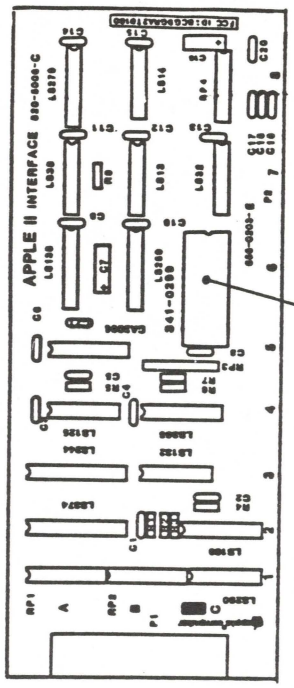

FIGURE 5

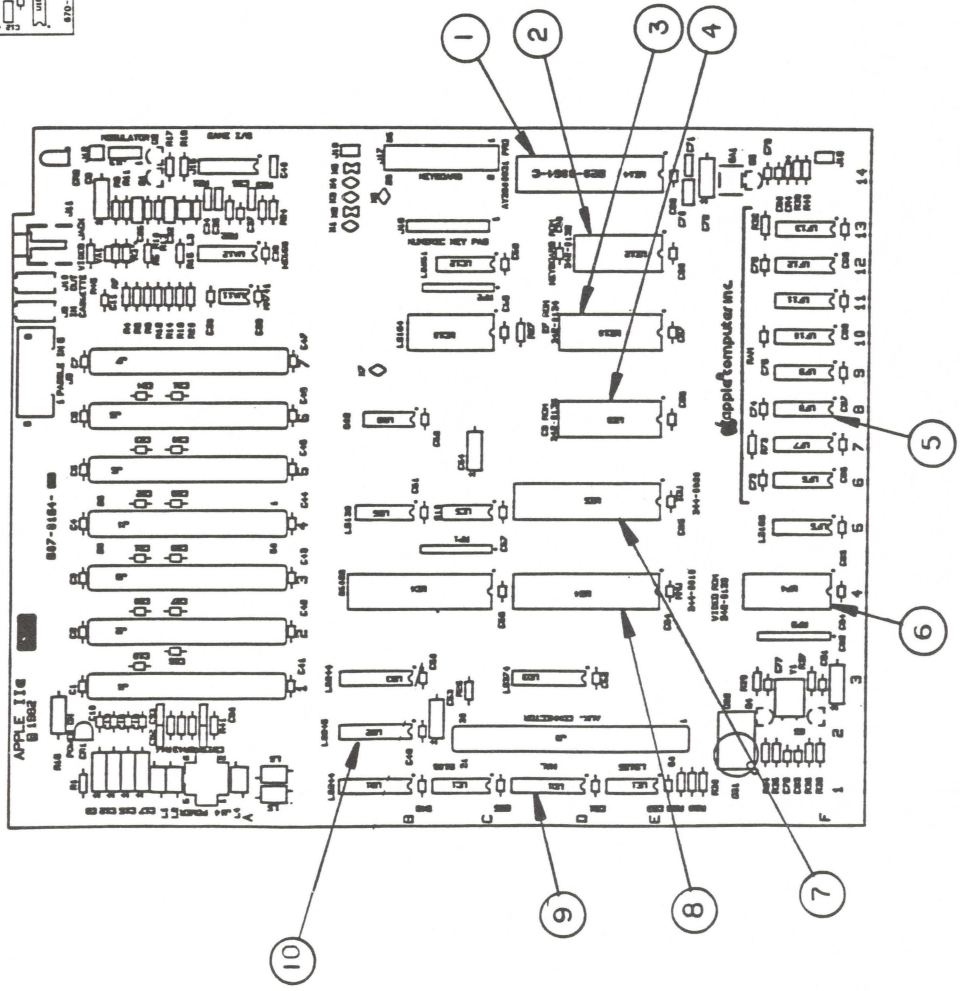

FIGURE 3

APPLE IIe - LOGIC BOARD (Figure 3)

Item	Part No.	Description
1	332-9600	IC Keyboard Encoder
2	342-0132	IC ROM 16K Keyboard
3	342-0134	IC ROM 'EF' Firmware
	342-0303	IC ROM 'EF' Enhanced Firmware
4	342-0135	IC ROM 'CD' Firmware
	342-0304	IC ROM 'CD' Enhanced Firmware
5	334-0003	IC, RAM 64K 200 NS w/Logo
6	342-0133	IC ROM 32K Charc Gen
7	344-0020	IC, IOU
8	344-0010	IC, MMU
9	342-0170	IC, PAL 16R8
10	306-0245	IC, 74LS245

APPLE IIe - PROFILE INTERFACE CARD (Figure 4)

1	341-0299	IC, EPROM XMEG Profile Interface

APPLE IIe - SUPER SERIAL CARD (Figure 5)

1	600-0008	Configuration Block SSC
2	590-0021	Cable Assembly Super Serial

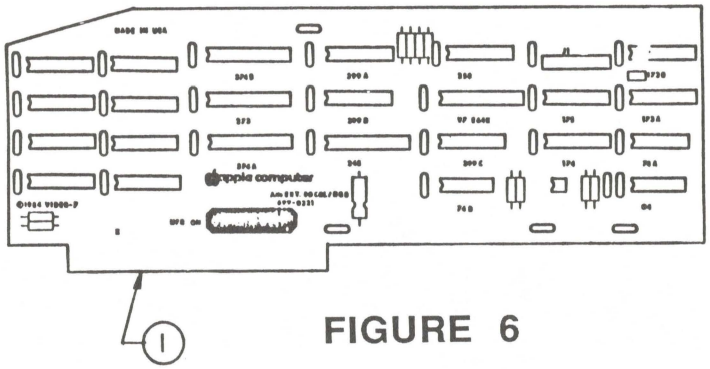

FIGURE 6

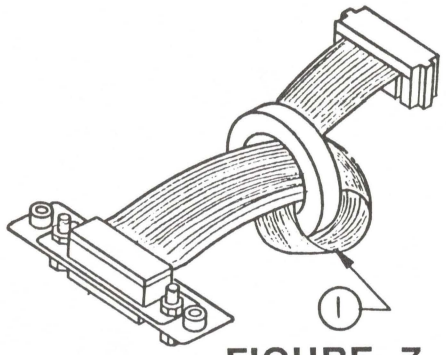

FIGURE 7

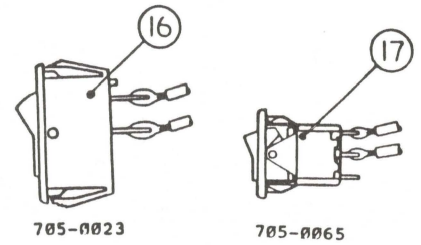

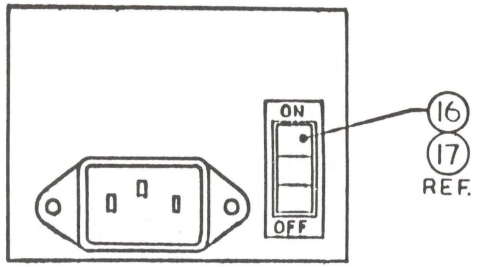

FIGURE 8

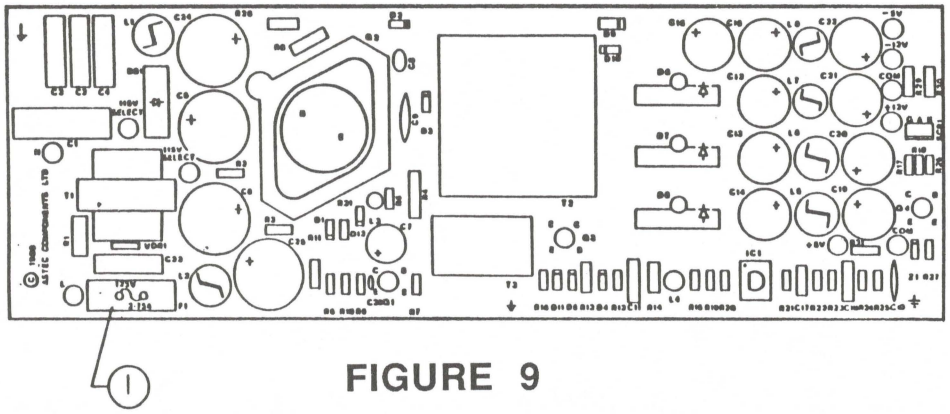

FIGURE 9

APPLE IIe - EXTENDED 80-COLUMN APPLECOLOR CARD (Figure 6)

Item	Part No.	Description
1	661-0262	Apple IIe Ext. 80 Column AppleColor Card

APPLE IIe - APPLECOLOR CARD CABLE (Figure 7)

1	600-0180	Cable, Ext. 80 Column AppleColor Card

APPLE IIe - POWER SUPPLY SWITCH (Figure 8)

16	705-0023	Switch, Power Supply, Rocker, Two Pole
17	705-0065	Switch, Power Supply, Rocker, Three Pole

APPLE IIe - POWER SUPPLY (Figure 9)

1	740-0001	Fuse, Power Supply, 1 Amp, 250V

The following keyswitches are illustrated in the Apple IIe product section, Appendix A, of your Technical Procedures Binder.

705-0015	Alps Short Stem Keyswitch
705-0070	Alps Long Stem Keyswitch
705-0075	SMK Keyswitch Short Stem
705-0077	Alps Alpha Lock Keyswitch
705-0079	SMK Short Stem Keyswitch
705-0080	SMK Caps Lock Short Stem
705-0081	SMK Long Stem Keyswitch
705-0082	SMK Caps Lock, Long Stem
705-0084	SMK Low Friction Long Stem
705-0085	SMK Low Friction Short Stem
815-0772	Straight Adapter
705-0044	Mitsumi Locking Keyswitch
705-0104	Mitsumi Keyswitch

Apple IIe Technical Procedures

Section 6

Apple II Memory Expansion Card

Contents:

Introduction.....6.3
Things to Remember.....6.3
Diagnostics and Troubleshooting.....6.4

MEMORY CONFIGURATION CHART

256K RAM CHIP

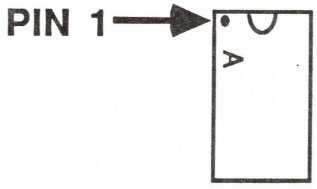

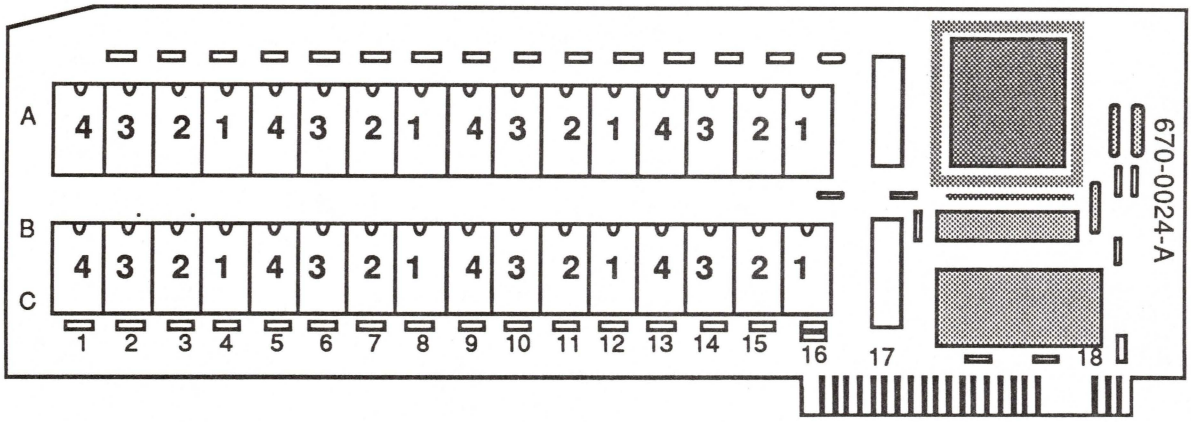

CARD SIZE	LOCATIONS OF 256K RAM CHIPS
256K	1
512K	1, 2
768K	1, 2, 3
1MB	1, 2, 3, 4

INTRODUCTION

The Apple® II Memory Expansion Card can be used with any of the expandable personal computers in the Apple II family. This card allows you to use an additional 256K, 512K, 768K or 1 Megabyte of temporary storage when using the ProDOS® Operating System.

THINGS TO REMEMBER

1. The Memory Expansion Card has ICs which are **HIGHLY SUSCEPTIBLE TO DAMAGE FROM ELECTROSTATIC DISCHARGE.** Ground yourself by touching the power supply case before picking up the Memory Expansion Card or installing it into any system. To further prevent any damage from electrostatic discharge, place the board in an anti-static bag before carrying it anywhere.

2. The Memory Expansion Card exchange modules are shipped **WITHOUT RAM.** All RAM ICs are considered a replaceable part. The 256K RAM is **SUSCEPTIBLE TO DAMAGE FROM ELECTROSTATIC DISCHARGE.** Touch the power supply case before handling or installing the RAM chips. **Remember to remove the RAM from the board you are sending to Apple. Bad RAM should not be sent in on the card.**

3. **The RAM has to be inserted in the correct sockets for the desired configuration.** Remember to place the dot or indentation on the chip in the correct direction for pin 1. Refer to the Memory Configuration Chart on the opposite page for the location and orientation of RAM.

4. Only Apple RAM should be used as replacement parts. (Apple RAM has the letter A near pin 1.)

5. The Memory Expansion Card works with the ProDOS Operating System. ProDOS automatically recognizes the card as a **RAMDISK.**

6. The Memory Expansion Card must be installed in slot 4, 5, or 6 to work with the Pascal Language System.

7. On the Apple IIe, the Memory Expansion Card can be installed in any slot except 3. On the Apple II Plus, the Memory Expansion Card can be installed in any slot except 0 (the Language Card must be installed there).

8. The Memory Expansion Card has no battery backup. The card is intended for temporary storage. Caution users to save their data often (every 15 to 20 minutes)!!

DIAGNOSTICS AND TROUBLESHOOTING

The Apple II Memory Expansion Card exchange module is shipped without socketed RAM. All socketed RAM must be removed before returning it to Apple.

Materials Required

Known-good Apple IIe
3.5-inch (or 5.25-inch) Disk Drive
Known-good RAM
Apple II Memory Expansion Card
Apple II Diagnostic Diskette

Testing the RAM

1. Install the Apple II Memory Expansion Card into any slot except 3.

2. Start up the Apple II Diagnostic Diskette (refer to **Section 2, Diagnostics**). Select the Apple II Memory Expansion Card Test and run the test.

3. Two types of failures are possible on the Apple II Memory Expansion Card:

   a) If a RAM chip fails, coordinates on the board are shown on the screen. The top row of RAM has the coordinates A1 through A16. The bottom row of RAM has the coordinates C1 through C16.

      1) Locate the RAM and replace it with a known-good RAM chip.

      2) Retest the card.

      3) Repeat steps 1) and 2) until the card passes.

   b) If the problem cannot be corrected by replacing a RAM chip, the screen will tell you to exchange the entire card.

      1) Remove all the RAM from the customer's card.

      2) Test the module being used for exchange using eight known-good RAMs.

      3) Install the customer's RAM into the new module.

      4) Retest the card.

      5) Return to the beginning of this step until the card passes.

Apple IIe Technical Procedures

Appendix A: Keyboard and Keyswitch Identification

There are several different types of keyswitch used in Apple IIe keyboards. To replace a faulty keyswitch, you must match the old keyswitch with a new one of the same type.

This procedure contains a chart with drawings and part numbers of all IIe keyswitches, listed by keyboard type. Before you use the chart, read the following background information on keyboards and keyswitches.

BACKGROUND INFORMATION: Keyboard and Keyswitch Differences

There are five main types of Apple IIe keyboard: Alps long stem, Alps short stem, SMK long stem, SMK short stem, and Mitsumi. On each keyboard, most keys have the standard ("alphanumeric") keyswitches shown below. (Special keyswitches are used for Caps Lock, Reset, and some other function keys. Refer to Figure 2, later in this procedure, after you know which type of keyboard you have.)

Stems: Short vs. Long, Flat vs. Round

"Short stem" keyswitches use adapters, small plastic pieces (usually white) that fit on the stem to make it longer. The keycap sits on the adapter.

"Long stem" keyswitches (and Mitsumi keyswitches) are capped directly with the keycap.

Alps and **Mitsumi** keyswitches have <u>flat</u> stems. **SMK** keyswitches have <u>round</u> stems, as you can see in the figure below.

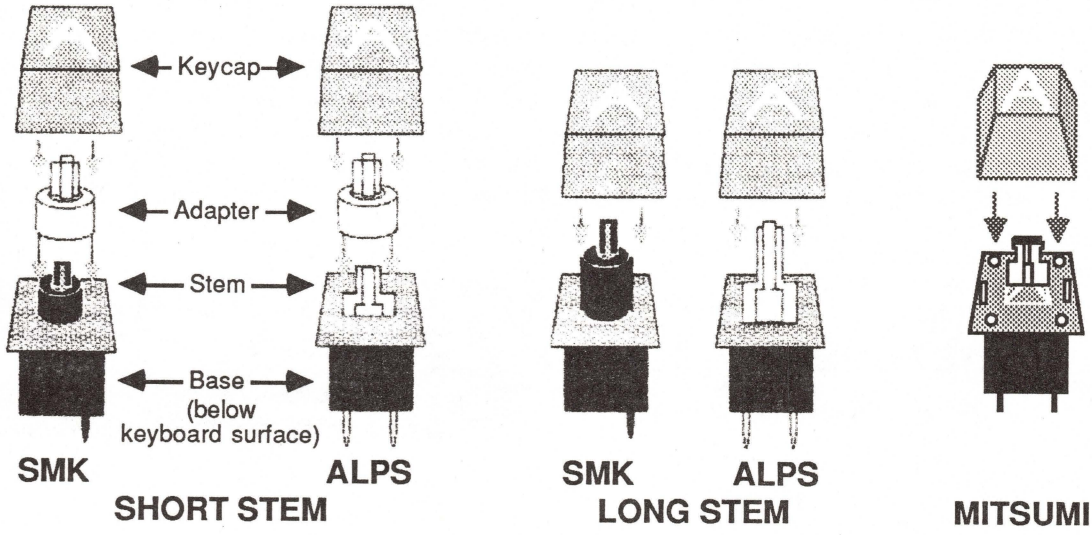

TO IDENTIFY IIe KEYBOARDS AND KEYSWITCHES:

1. Pry off the keycap with a small screwdriver so that you can see:

   a) whether the keyswitch uses an adapter.

   b) whether the lower part of the stem is flat or round.

2. If the keyswitch is flat and has no adapter, it could be either Alps long stem or Mitsumi. To determine which it is, examine the CAPS LOCK keyswitch. If there is a spring around its stem, it is Alps long stem; if not, it is Mitsumi.

3. Use the table below to identify the general type of keyswitch (Alps, SMK, or Mitsumi; long stem or short stem). Then use Figure 2 (next two pages) to identify the exact keyswitch needed.

TABLE 1

KEYSWITCH TYPE:	SMK Short Stem	SMK Long Stem	Alps Short Stem	Alps Long Stem	Mitsumi
Stem shape (lower part of stem)	Round	Round	Flat	Flat	Flat
Keyswitch uses **adapter?**	Y	N	Y	N	N
Caps lock key has **spring?**				Y	N

4. Plate numbers: You can also identify standard Apple IIe keyboards (without numeric keypad) by finding the plate number on the black metal keyboard plate. After you remove the keyboard from the computer, locate this number on the top left edge of the plate (see Figure 1, #1). (The Mitsumi keyboard has no plate number.) Then find the plate number in the right column of Figure 2, and look in the left column to find the exact keyswitch.

FIGURE 1:
PLATE NUMBER (1)

TOP VIEW OF REMOVED KEYBOARD

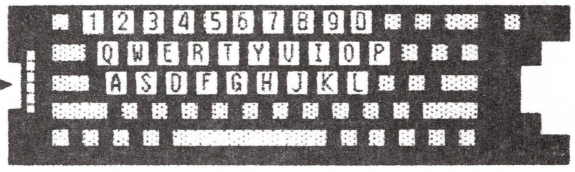

KEYSWITCH	PLATE NUMBER ON KEYBOARD
A. SMK Long Stem  705-0081 SMK Long Stem Alphanumeric keys 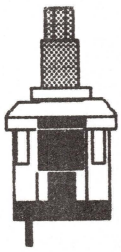 705-0084 SMK Low Friction Long Stem Used for Spacebar, Shift; sometimes for Tab, Ctrl, Delete, Return.  705-0079 SMK Short Stem Reset  705-0082 SMK Caps Lock ("Alternate Action") Long Stem	805-0199
B. SMK Short Stem 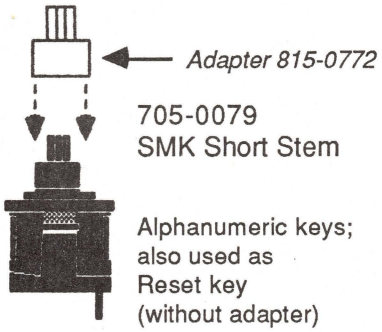 *Adapter 815-0772* 705-0079 SMK Short Stem Alphanumeric keys; also used as Reset key (without adapter) 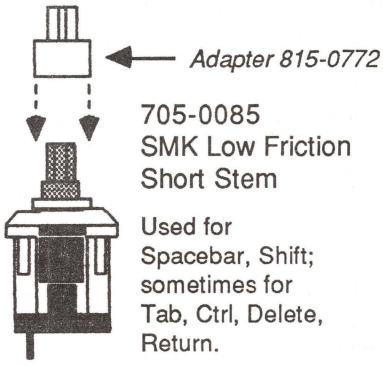 *Adapter 815-0772* 705-0085 SMK Low Friction Short Stem Used for Spacebar, Shift; sometimes for Tab, Ctrl, Delete, Return.  705-0080 SMK Caps Lock ("Alternate Action") Short Stem	805-0192

FIGURE 2: APPLE IIe KEYSWITCHES (continued on next page)

KEYSWITCH	PLATE NUMBER ON KEYBOARD
C. Alps Short Stem 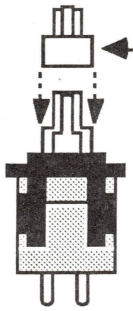 *Adapter 815-0772* 705-0015 Alps Short Stem  705-0077 Alps Alpha Lock ("Alternate Action")	805-0195
D. Alps Long Stem 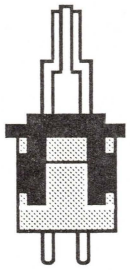 705-0070 Alps Long Stem ("Extended")  705-0077 Alps Alpha Lock ("Alternate Action")	805-0182
E. Mitsumi  705-0104 Mitsumi Keyswitch 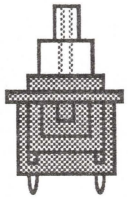 705-0044 Mitsumi Locking Keyswitch	(none)

FIGURE 2: APPLE IIe KEYSWITCHES

Apple IIe Technical Procedures

Appendix B

Apple II Plus and Apple IIe: Differences

The question most often asked is, "What are the differences between the Apple II Plus and the Apple IIe?" When you look at the systems, several differences are apparent, such as the layout of the keyboard and the addition of keys for the Apple IIe. With these new keys additional functions can be performed.

You can see other differences when you remove the cover. First, many of the options for the Apple II Plus are standard on the Apple IIe, such as a built-in language card. The Apple IIe has only 31 chips, the language card is built-in, and there is an auxiliary slot for an 80 column card. Not visible is the fact that the Apple IIe runs self-diagnostics when the system is booted.

A table of the differences between the Apple II Plus and the Apple IIe is shown on the following page.

APPLE II PLUS AND APPLE IIe: DIFFERENCES

	Apple II Plus	Apple IIe
CPU	6502	6502A
Main Memory	48K expandable to 64K (110 ICs)	64K expandable to 128K (31 ICs)
Graphics Capabilities	Hi-Res capability	Double Hi-Res can be added
Keyboard	Upper case 51 keys No auto repeat	Upper/lower case 63 keys Auto repeat
Arrow keys	Use i,j,k,m	right, left, up, down
Screen display	40 characters/line	40 characters/line; can be extended to 80
Expansion	8 expansion slots (0 - 7)	8 expansion slots - 7 general purpose - auxiliary 80 column
Operating system	DOS	DOS 3.3, ProDOS®
Built-in Language (in ROM)	Applesoft BASIC	Applesoft BASIC
Languages Available	Auto-start Monitor (in ROM), Integer BASIC, Pascal, FORTRAN, C/S, COBOL, Pilot, Logo, many others	Same as Apple II Plus
Expansion Cards	Language card (16 byte expansion memory), Integer BASIC firmware, hobby prototyping cards, Memory Expansion card, and others	80 column text card, Extended 80 Column card, Memory Expansion card, and others
Interface Cards	Super Serial Interface Parallel Interface IEEE 488 Interface	Super Serial Interface Parallel Interface IEEE 488 Interface

End of Apple ii/e section
start of Apple ii/c section

Apple Technical Procedures

Apple IIc

Table of Contents

Section 1 – Basics

1.2 Product Description
1.2 Display
1.2 CPU
1.2 Memory
1.2 Disk Drives
1.3 Input/Output
1.3 Keyboard
1.3 Indicators
1.4 Interface Ports
1.6 Other Information
1.6 Differences Between the Apple IIc's
1.7 Theory of Operation
1.7 Introduction
1.9 Logic Board
1.10 AC Power Pack
1.10 Internal Power Supply
1.11 Internal Disk Drive
1.11 Keyboard
1.12 Electrostatic Discharge (ESD) Precautions

Section 2 – Take-Apart

2.3 Electrostatic Discharge Precautions
2.4 Top Cover
2.6 Keyboard and Memory Expansion Card
2.8 Disk Drive
2.9 Analog Card
2.12 Mechanical Assembly
2.12 Bezel, Door, and Spring Assembly
2.14 Internal Power Supply
2.15 Speaker
2.17 Logic Board
2.18 Volume Control
2.19 Power Switch

Section 3 – Preventive Maintenance

3.2 Introduction
3.2 Disk Drive Read/Write Head
3.3 Disk Drive Head Load Button

Section 4 – Diagnostics

4.2 Introduction
4.3 Things to Remember
4.3 Before You Begin
4.3 Setting Up
4.4 While Testing
4.5 Built-In Diagnostic
4.5 Running the Diagnostic
4.5 Results
4.6 Apple IIc Diagnostic Diskette
4.6 Materials Required
4.6 Main Menu
4.7 Choose Tests
4.10 Options
4.10 Special
4.11 Running the Diagnostics
4.15 Test Failures

Section 5 – Troubleshooting

5.2 Introduction
5.2 General Information
5.2 Before You Start
5.2 How to Use the Symptom Charts
5.3 Things To Remember
5.3 Symptom Chart
5.3 Video Problems
5.3 Display Problems
5.3 Peripheral Problems
5.4 Miscellaneous Problems
5.5 Special Problem Symptom Chart

Section 6 – Additional Procedures

6.2 Apple IIc - Model A2S4100
6.2 Memory Expansion Card Installation
6.6 Diagnostics and Troubleshooting
6.9 Logic Board Rubber Feet Installation
6.10 Apple IIc - Model A2S4000
6.10 UniDisk 3.5 Compatibility
6.10 Serial Port Upgrade
6.10 AC Power Pack Upgrade
6.11 Internal Power Supply Shield Retrofit
6.12 Upper Head Shield Plate Installation
6.16 Internal Power Supply Upgrade
6.17 Expandable Logic Board Installation

Section 7 - Illustrated Parts List

7.3 Finished Goods Assembly
7.5 Memory Expansion Card

©Apple Computer, Inc., 1986, 1987. No portion of this document may be reproduced in any form without the written permission of Apple Computer, Inc.

Apple IIGS, Apple 5.25 Drive, UniDisk 3.5, AppleColor, and AppleMouse are trademarks of Apple Computer, Inc. Apple IIc, ProDOS, Apple, and the Apple logo are registered trademarks of Apple Computer, Inc.

Apple Technical Procedures

Apple IIc

Section 1 – Basics

❑ CONTENTS

1.2 Product Description
1.2 Display
1.2 CPU
1.2 Memory
1.2 Disk Drives
1.3 Input/Output
1.3 Keyboard
1.3 Indicators
1.4 Interface Ports
1.6 Other Information
1.6 Differences Between the Apple IIc's
1.7 Theory of Operation
1.7 Introduction
1.9 Logic Board
1.10 AC Power Pack
1.10 Internal Power Supply
1.11 Internal Disk Drive
1.11 Keyboard
1.12 Electrostatic Discharge (ESD) Precautions

❑ PRODUCT DESCRIPTION

The latest addition to the Apple® IIc family incorporates an expansion connector that supports the addition of a Memory Expansion Card. System memory can now be expanded to 1.15 megabytes.

Display

The video display has the following capabilities:

- 40-column x 24-line text mode
- 80-column x 24-line text mode
- Low-resolution graphics (40 x 48)
- High-resolution graphics (80 x 192)
- Double high-resolution graphics (560 x 192)
- 96 ASCII characters including upper and lower case, 32 graphics characters (Mousetext)
- NTSC compatible output

CPU

The central processing unit has the following attributes:

- 65C02 at 1.02 MHz
- 8-bit data bus
- 16-bit address bus

Memory

The IIc has the following memory capabilities:

- 128K RAM, expandable to 1.15 Megabytes with a Memory Expansion Card
- 32K ROM

Disk Drives

Mass storage is available in the following configurations:

- 5.25" built-in
- 5.25" or 3.5" external drive (optional)

Input/Output

A variety of built-in I/O ports and devices are included:

- Built-in speaker
- Connector for using headphones
- Joystick/Mouse port
- 2 RS-232 Serial ports
- Video expansion port

Keyboard

The keyboard has the following features:

- 63 keys
- 128-character ASCII set including 32 control characters
- Upper and lower case
- DVORAK or Sholes standard layout

Indicators

The following indicators are present:

- Power
- Disk activity

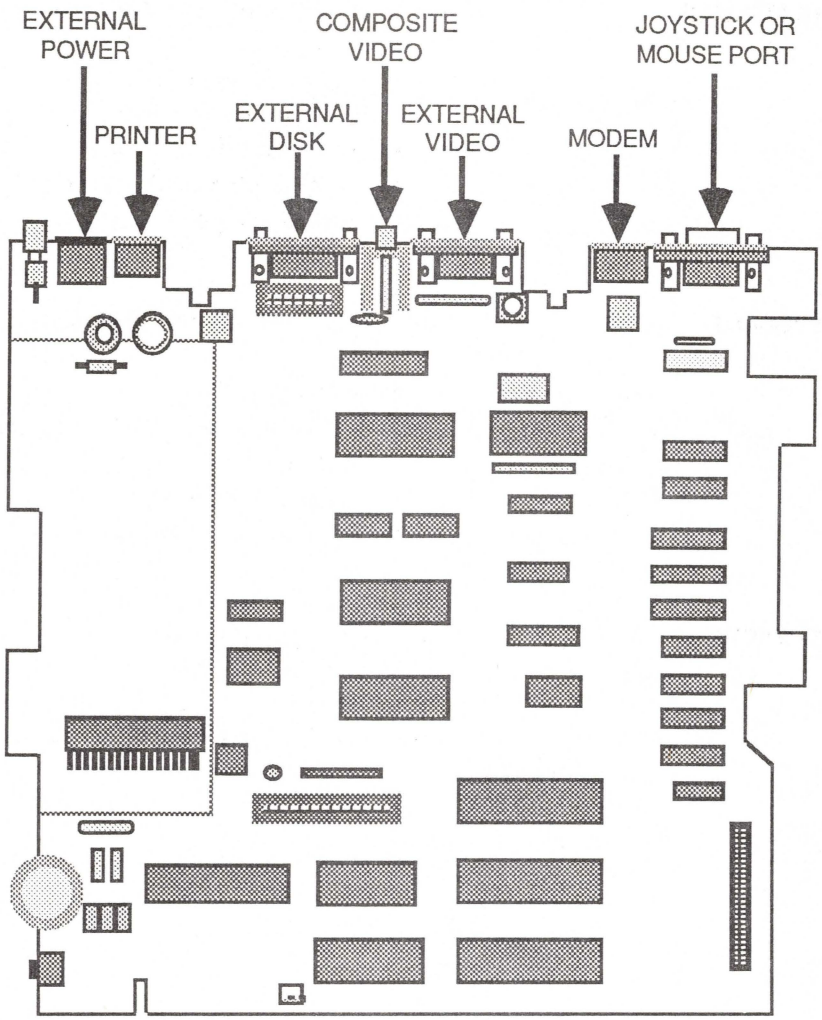

FIGURE 1

Interface Ports

The Apple IIc contains the following interface ports (Figure 1):

- **Joystick/Mouse**
- Support for Mouse IIc
- Support for Joystick IIc

- **Modem**
- RS-232 Serial
- 50 to 19.2K baud
- 5, 6, 7, or 8 data bits
- 1 or 2 stop bits
- Odd, Even, or No Parity
- DB-9 Connector

- **External Video**
- RF modulator support
- Flat Panel Display
- RGB output

- **Composite Video**
- NTSC composite monochrome and color

- **External Disk**
- Supports the Disk IIc®, Apple 5.25 Drive™, and UniDisk™ 3.5

- **Printer**
- Identical to Modem Port (see above).

- **External Power Connector**
- Connection to AC Power Pack

❑ OTHER INFORMATION

Differences Between the Apple IIc's

This section describes the differences between the older Apple IIc (designated as model A2S4000) and the current IIc (designated as model A2S4100). The model number is found on the case bottom along with the serial number tag.

	A2S4000	A2S4100
Maximum Memory Configuration	128K	1.15 MB
Cosmetics	White case Beige highlights	White case Platinum highlights
Functional	Slot 4 - Mouse Port Slot 7 - Reserved	Slot 4 - Memory Expansion Card Slot 7 - Mouse Port

❑ THEORY OF OPERATION

Introduction

Troubleshooting can be approached in many different ways. Apple recommends two methods in particular: logical troubleshooting and module swapping in a particular order for a particular symptom. Most troubleshooting charts in Apple Technical Procedures manuals are based upon the module-swapping method, but you can often save repair time by using logical troubleshooting before you start swapping.

Logical troubleshooting involves knowing the function of each module in the machine, and using that information to narrow down your search for the problem. This section will provide you with the information necessary to perform logical troubleshooting of the Apple IIc. The information here includes a description of each module in the IIc and the various functions it performs. (For definitions of basic terms, See "Simplified Overview of a Microcomputer System," under the tab *You Oughta Know.*)

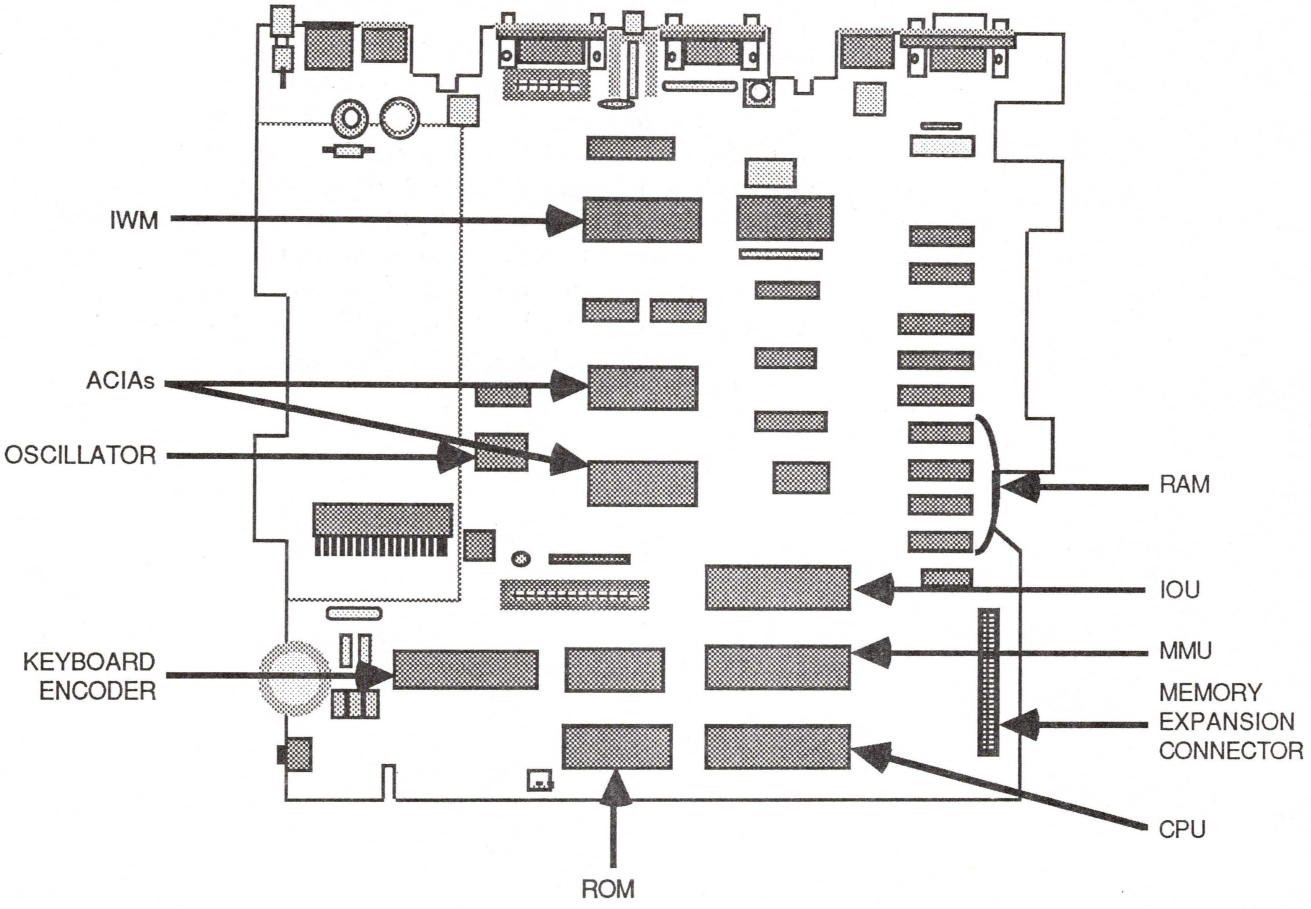
IWM
ACIAs
OSCILLATOR
KEYBOARD
ENCODER
RAM
IOU
MMU
MEMORY
EXPANSION
CONNECTOR
CPU
ROM

FIGURE 2

Logic Board

The Logic Board (Figure 2) is the heart of the system. It contains the components described below.

- The **CPU**, a 65C02 microprocessor, gets instructions from memory, translates them, and carries them out. It communicates with all components on the Logic Board.
- The **RAM** (read/write memory) is used to store, on a temporary basis, programs and data.
- The **ROM** (read-only memory) contains the Applesoft BASIC language, machine language Monitor, and the enhanced video firmware.
- The **Memory Management Unit** (MMU) contains most of the logic that controls memory addressing.
- The **Input/Output Unit** (IOU) contains most of the logic that controls the built-in input and output ports.
- The **Integrated Woz Machine** (IWM) is a self-contained disk controller card on a single integrated circuit. This IC supports both 3.5- and 5.25-inch disk drives.
- Two **6551 Asynchronous Communication Interface Adapters** (ACIA) handle the information to be sent and received through the two built-in serial ports.
- The **3600PRO Keyboard Encoder** interprets data sent from the keyboard when a key is pressed.
- The **Oscillator** (timing device) generates the master clock pulse. This master pulse is sent to two custom components, which break down the clock pulse and send it to various ICs on the logic board.
- A **Memory Expansion Connector** allows you to add a Memory Expansion Card containing up to 1 Megabyte of RAM. This brings total system memory to 1.15 Megabytes.

AC Power Pack

Power is supplied by the AC Power Pack (Figure 3-A), which converts AC voltage into 15 volts DC. The DC voltage is sent to a 7-pin DIN connector on the rear of the computer.

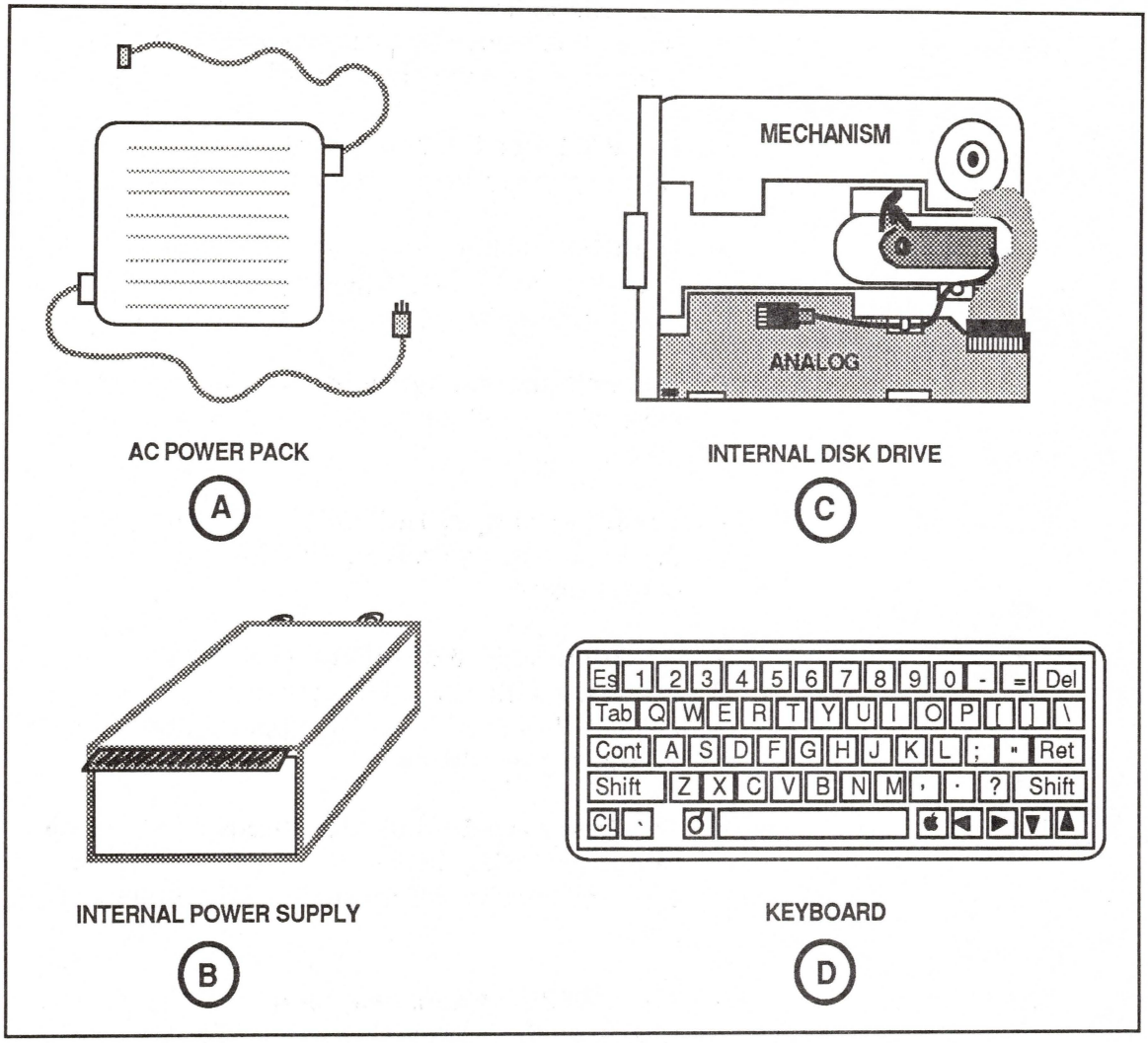

FIGURE 3

Internal Power Supply

The internal power supply (Figure 3-B) uses the 15 volts DC from the AC Power Pack to generate the DC voltages needed by the system.

Internal Disk Drive

The internal disk drive (Figure 3-C) is composed of two exchangeable modules: the analog card and the mechanical assembly.

The **analog card** interprets the instructions from the logic board and lets the mechanical assembly know what to do. The **mechanical assembly** rotates the diskette and moves the read-write head over the proper area on the diskette for reading or writing.

Keyboard

The keyboard (Figure 3-D) is a matrix of keyswitches connected to the logic board via a ribbon (flat) cable. The 3600 PRO keyboard encoder IC on the logic board translates the information from the keyboard into signals that the logic board can use.

❑ ELECTROSTATIC DISCHARGE (ESD) PRECAUTIONS

Electrostatic Discharge (ESD) can cause severe damage to sensitive microcircuits. Just touching a chip or brushing it with a nylon sleeve can degrade a circuit so that it never again performs to specification. Some microcircuits are sensitive to as little as 500 volts, or about one-sixth as much static electricity as you can feel.

Certain preventive measures must be taken to avoid ESD damage. When you are unwrapping, installing, or replacing any microcircuits, observe the following precautions:

Grounds

Before working on any device containing a printed circuit, ground yourself and your equipment to an earth or building ground.

Use a grounded conductive workbench mat and a grounding wriststrap, and ground your equipment to the mat.

Bodies

Don't touch anybody who is working on integrated circuits.

If that person is properly grounded, your "zap" may not cause any damage, but just to be on the safe side, keep your own body charge away from other technicians.

Bags

Use antistatic bags for boards and chips during handling.

Whenever you are about to leave your bench and take a board to a storage place, first put the board in an antistatic bag. Leave all Apple service exchange components in their ESD-safe packaging until needed for use.

Leads

Handle all ICs by the body, not the leads.

Also, do not touch PCB edge connectors, exposed circuitry, or printed circuits. Handle ICs and PCBs by the edges, or use extractors.

Synthetics

Do not wear polyester clothing or bring plastic, vinyl, or styrofoam into the work environment.

The electrostatic field around these nonconductors cannot be removed.

Metals

Never place components on any metal surface.

Use antistatic or conductive mats or foam.

Atmosphere

If possible, keep the humidity in the service area between 70% and 90%, and use an ion generator.

Charge levels are reduced (but not eliminated) in high humidity environments and in areas where an ion generator is used routinely.

Apple Technical Procedures

Apple IIc

Section 2 – Take-Apart

❑ CONTENTS

2.3 Electrostatic Discharge Precautions
2.4 Top Cover
2.6 Keyboard and Memory Expansion Card
2.8 Disk Drive
2.9 Analog Card
2.12 Mechanical Assembly
2.12 Bezel, Door, and Spring Assembly
2.14 Internal Power Supply
2.15 Speaker
2.17 Logic Board
2.18 Volume Control
2.19 Power Switch

Note: If a step is underlined, detailed instructions for that step can be found elsewhere in this section.

❑ ELECTROSTATIC DISCHARGE PRECAUTIONS

Electrostatic discharge can be an important factor in causing board failures: even if the failures are not immediate and dramatic, static zaps can degrade chips in such a way that they fail weeks or months after exposure.

Be sure to follow the ESD prevention information located in Section 1, Basics, to avoid damage to any Apple II electronics.

❑ TOP COVER

Materials Required

#2 Phillips screwdriver
Jeweler's screwdriver

Remove

1. Turn off the power and disconnect all cables from the back of the computer.
2. Move the handle into carrying position.
3. Turn the computer upside down.
4. Remove the six case screws (Figure 1, #1).
5. If you are replacing the disk drive, logic board, volume control, or power switch, also remove the disk drive mounting screws (Figure 1, #2).

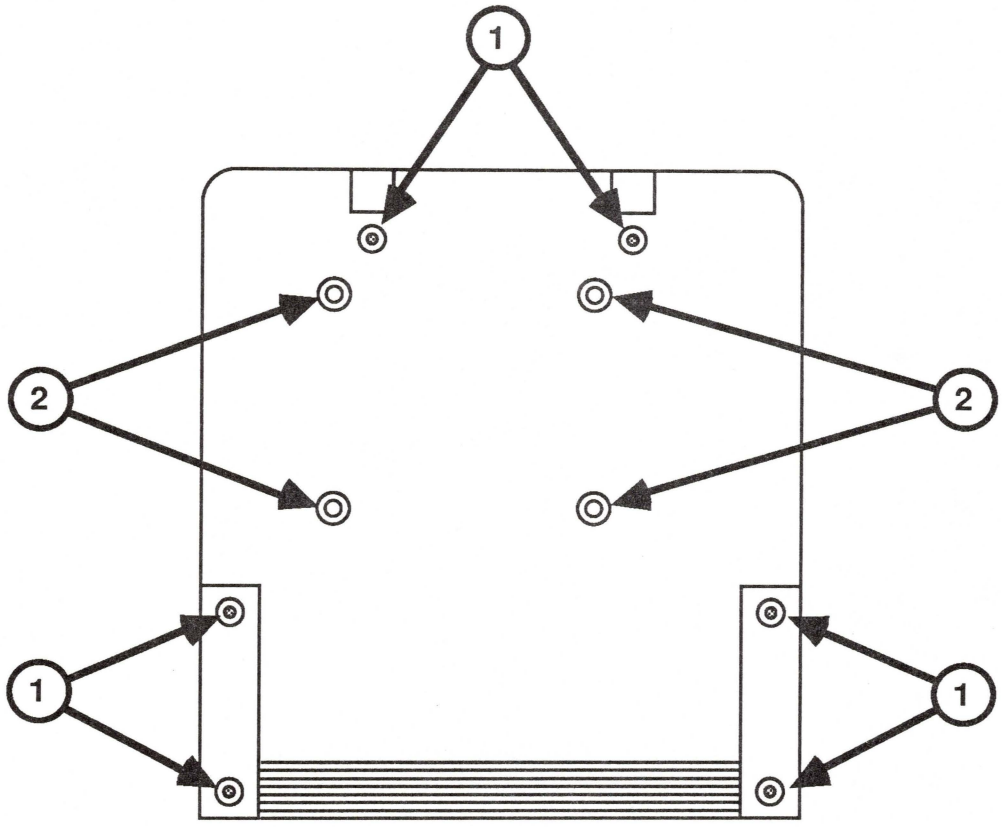

FIGURE 1

6. Hold the case together and turn it over (keyboard face up) with the keyboard toward you.

7. Grasp the sides of the IIc at the front so that your thumbs meet in the front center of the top cover.

8. Press back and up with your thumbs while gripping the sides of the case, so that the top cover flexes and the snaps come free.

   If you have difficulty with this, insert the tip of the screwdriver in the front center of the case between the top cover and base. Then move the end of the screwdriver up. This will undo the snap at the front of the cover and allow you to lift the cover with your fingertips.

   Note: In addition to the snap at the front center of the top cover, there is one snap on each side of the disk drive door. You will feel resistance from them, but don't worry: just pull the cover off.

9. Remove the handle and lay it aside.

Replace

1. If the handle is not already in place, snap it into the grooves in the back of the computer.

2. Make sure the keyboard is properly seated in the grooves in the side of the disk drive shield and within the plastic guides that surround it.

3. Fit the top cover onto the base. Make sure it snaps into place at the two back corners, on either side of the disk drive door, and at the center of the front edge.

4. Turn the computer over and replace the screws as follows:

   a) The four large-head flat-nose screws attach the disk drive to the case.

   b) The six small-head pointed-nose screws hold the case together.

❑ KEYBOARD AND MEMORY EXPANSION CARD

Materials Required

Needlenose pliers

Remove

1. Remove the top cover.

2. Lift the front of the keyboard up and forward. Rest the keyboard upside-down on the disk drive.

If a Memory Expansion Card is **not** installed, skip to step 5.

3. Using the needlenose pliers, squeeze each of the four nylon clips securing the Memory Expansion Card to the stand-offs (see Figure 2, #1), and simultaneously lift the edge of the board nearest that stand-off. Start with the stand-off in the upper-left corner of the board and work counter-clockwise. To avoid causing damage to the printed circuit board, hold the pliers straight up.

4. Lift the Memory Expansion Card straight up and lay it aside.

5. Disconnect the keyboard cable connector from the logic board.

Replace

1. Rest the keyboard upside down on the disk drive.

2. Connect the cable from the keyboard to the logic board.

If a Memory Expansion Card is **not** installed, skip to step 5. If a Memory Expansion card **is** installed, continue with step 3.

3. Prior to installing a new keyboard in the computer, verify that four rubber feet have been installed on the solder side of the keyboard. If there are no rubber feet present, refer to "Memory Expansion Card Installation" in section 6, Additional Procedures, for placement information.

4. Place the Memory Expansion Card on the four nylon stand-offs, component side down and with the connector at the right side. **Gently** press down on the card starting at the connector side and then at each stand-off on the left side.

5. Slide the back edge of the keyboard into the slots in the side of the disk drive shield. Make sure the keyboard is seated inside the plastic guides that surround it.

6. Replace the top cover.

   Note: Refer to *You Oughta Know* for replacement of individual keyswitches.

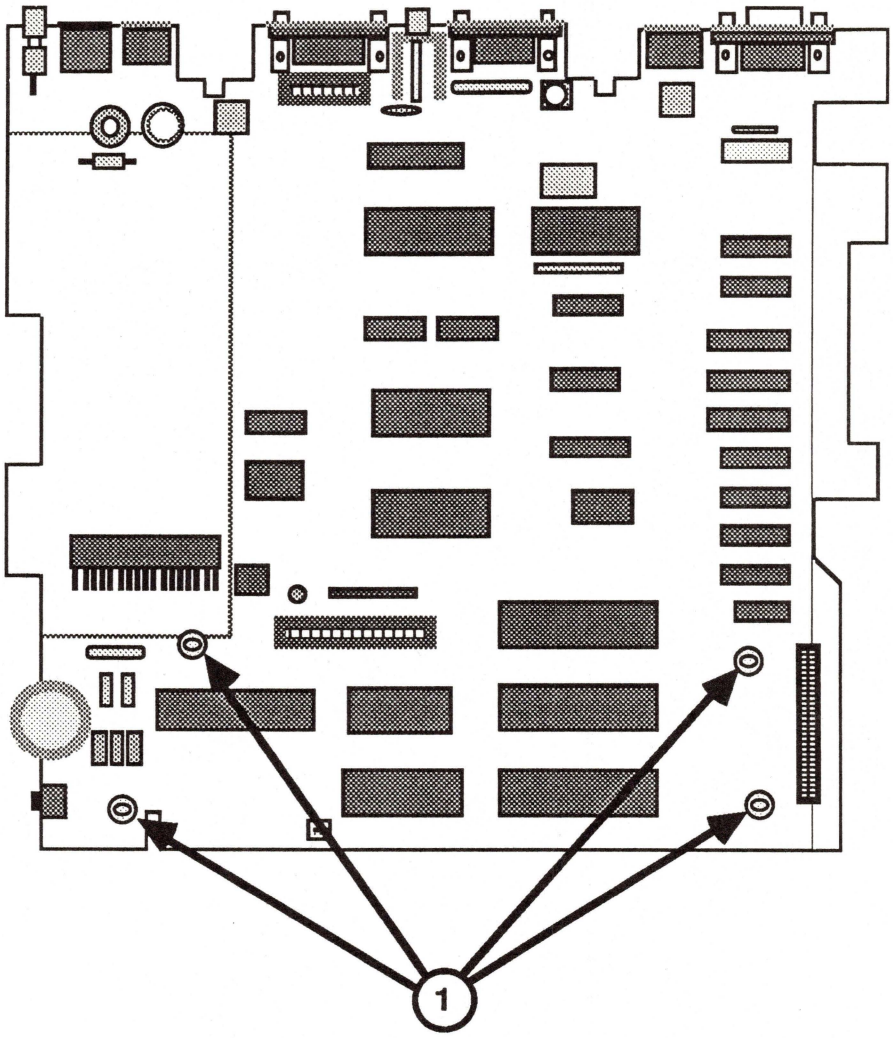

FIGURE 2

❑ DISK DRIVE

Materials Required

#2 Phillips screwdriver

Remove

1. Remove the top cover, including the four disk drive screws, and place the IIc on your work surface.
2. Lift the disk drive up and back. Place it upside down on the table behind the computer.
3. Disconnect the disk drive cable connector from the logic board.

Replace

1. Attach the disk drive cable connector to the logic board.
2. Place the disk drive in the case. Line up the disk drive door with the cutout in the case, the ground clip with the keyboard, and the tab on the keyboard with the slot in the disk drive shield.
3. Replace the top cover.

❑ ANALOG CARD

Materials Required

#2 Phillips screwdriver

Remove

1. Remove the disk drive.
2. Remove the cable from the disk drive (Figure 3, #1).
3. Remove the four Phillips screws, two from either side of the disk drive shield.
4. Pull up on the shield to remove it from the disk drive.
5. On the analog card, disconnect the cable from connector J2 (Figure 3, #2).

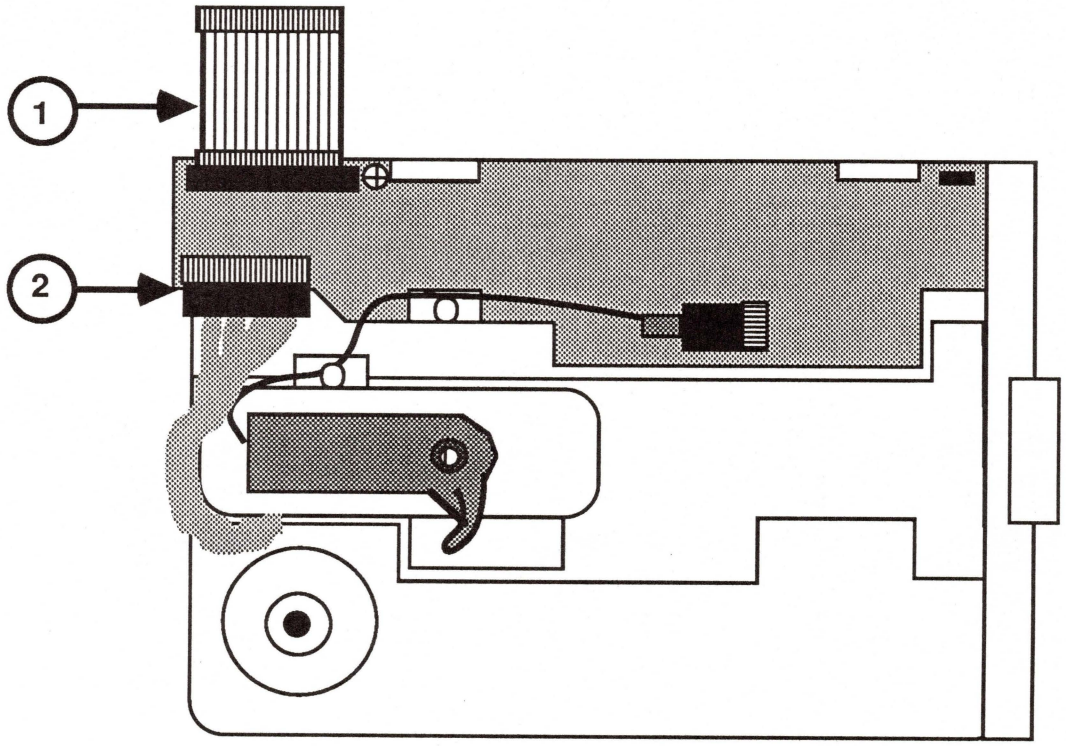

FIGURE 3

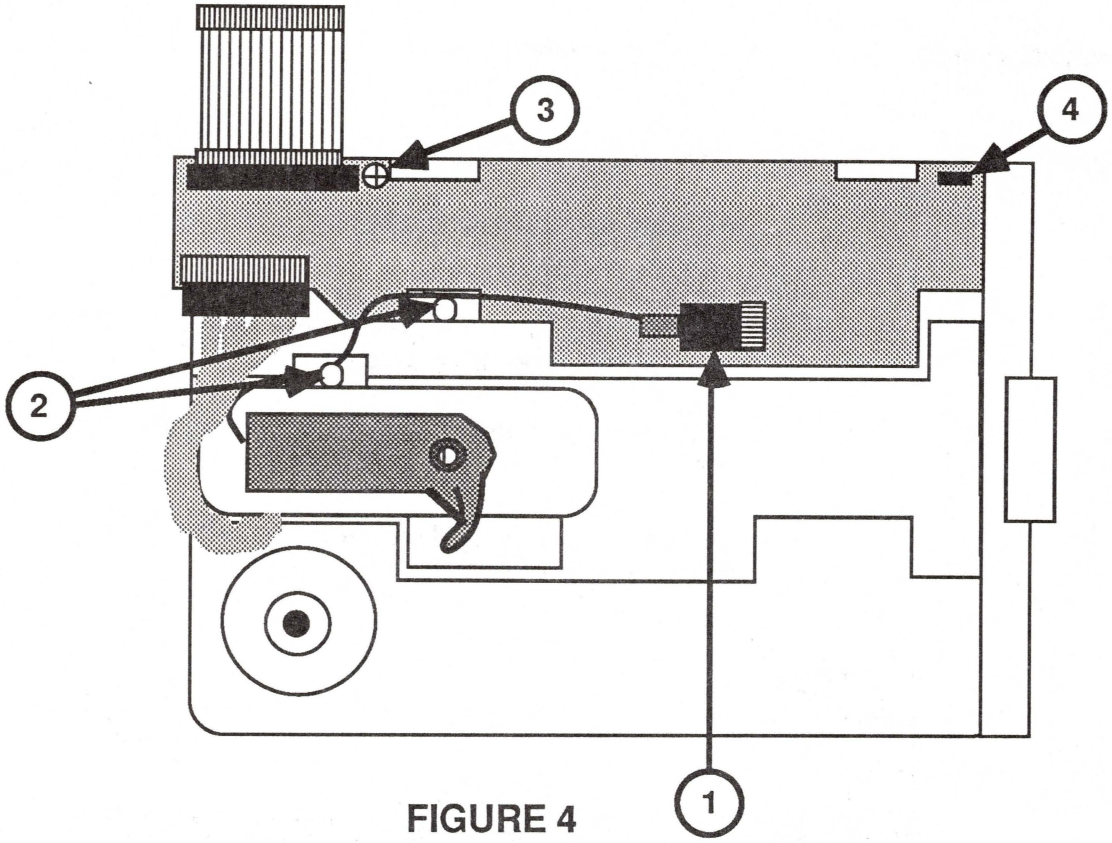

FIGURE 4

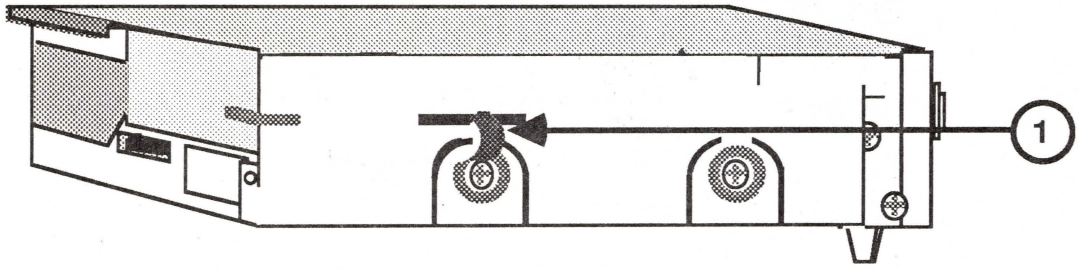

FIGURE 5

6. On the analog card, disconnect the cable from connector J3 (Figure 4, #1) and carefully remove the wire from the clips (Figure 4, #2).

7. Remove the Phillips screw that mounts the analog card to the disk drive chassis (Figure 4, #3).

8. Tilt the rear edge of the analog card slightly up, and slide the card away from the disk drive.

Replace

1. Slide the front edge of the card under the two plastic posts located on the inside of the disk drive bezel. Lay the card on the chassis so that the alignment tab (Figure 4, #4) protrudes through the hole.

2. Replace the Phillips mounting screw.

3. Look at the read/write head cable (Figure 4, #1) that attaches to connector J3, and note that only four wires are connected to the five-pin connector. Connect the read/write head cable, making sure that each wire makes contact with a pin on the header.

4. Position the wire and, if necessary, carefully bend the clips to hold it in place.

5. Connect the motor cable to connector J2. The cable should be oriented so that the end of the connector with the single wire is toward the rear of the disk drive.

6. Replace the shield and corresponding Phillips screws. Make sure the ground clip is installed at the left-front position (Figure 5, #1).

7. Replace the disk drive flat cable. Orient the cable so that the red stripe is at the rear of the disk drive.

8. Replace the disk drive.

❑ MECHANICAL ASSEMBLY

Materials Required

#2 Phillips screwdriver

Remove

1. Remove the analog card.
2. Replace the shield if returning the mechanical assembly to Apple for exchange.

   Note: The disk drive shield must be installed on the mechanical assembly when the disk drive is sent to Apple for exchange. Also, be sure to remove the LED cable.

Replace

1. Remove the shield if present.
2. Replace the analog card.

❑ BEZEL, DOOR, AND SPRING ASSEMBLY

Materials Required

#2 Phillips screwdriver

Remove

1. Remove the disk drive.
2. Remove the flat cable from the disk drive.
3. Remove the four Phillips screws, two from either side of the disk drive shield.
4. Pull up on the shield to remove it from the disk drive.
5. Remove the four Phillips screws that attach the bezel to the disk drive (two screws on each side).
6. Open the disk drive door by pushing inward. As you pull the bezel from the disk drive, hold on to the spring. It is not firmly attached and may fall out.

7. To remove the door from the bezel, simultaneously push it forward and rotate the rear edge up. Now pull it backward out of the bezel.

8. Remove the spring from the door.

Replace

1. Put the door in the bezel (Figure 6, detail A).

2. Hold the door and bezel together. Slide the projecting part of the door partway into the grooves of the hub frame (Figure 6, detail B).

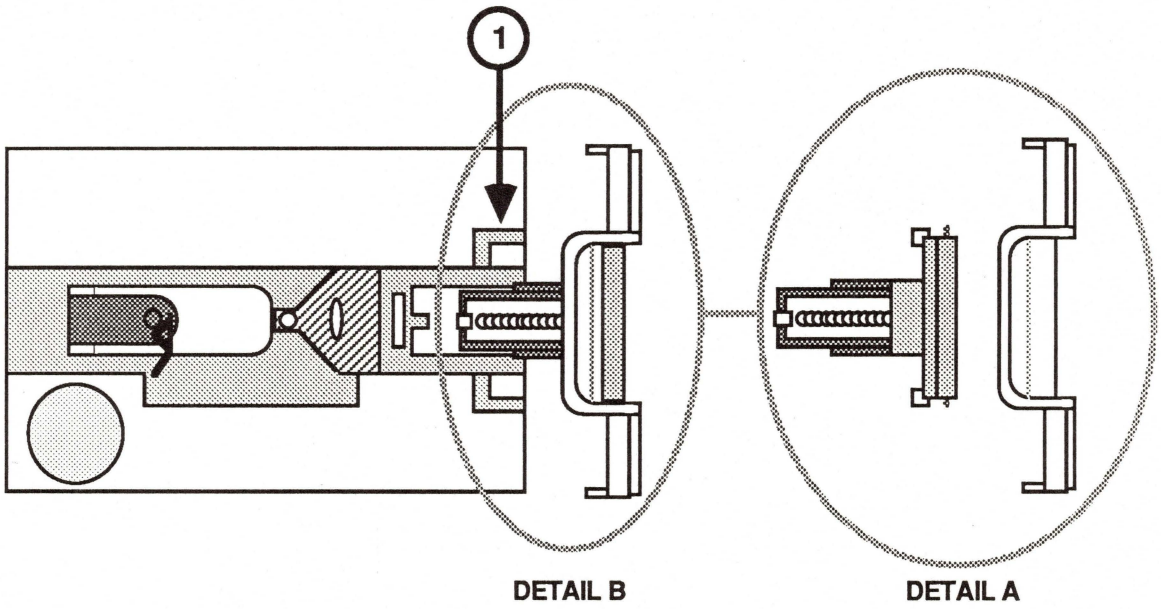

FIGURE 6

3. As you fit the bezel onto the disk drive:

   a) Push down the hub frame so that its aluminum arms (Figure 6, #1) fit under the top edge of the bezel.

   b) If the analog card is present, make sure that it is held in place under the two tiny posts on the inside of the bezel.

4. Install the spring. (Hint: Put one finger under the disk drive door to guide the spring.)

5. Close the disk drive door and put the bezel into place.

6. Replace the Phillips screws that attach the bezel to the disk drive.

7. Replace the shield and corresponding Phillips screws. Make sure the ground clip is installed at the left-front position.

8. Replace the flat cable. Orient the cable so that the red stripe is at the rear of the disk drive.

9. Replace the disk drive.

❑ INTERNAL POWER SUPPLY

Materials Required

#2 Phillips screwdriver

CAUTION: Make sure the power cord has been disconnected from the rear of the computer.

Remove

1. Remove the top cover.

2. Remove the two screws that mount the power supply to the case.

3. Tip the back of the power supply up a little and pull the power supply from the connector.

Replace

1. Slide the power supply into the connector.

2. Install the two screws that mount the power supply to the case.

3. Replace the top cover.

❑ SPEAKER

Materials Required

#2 Phillips screwdriver
Jeweler's screwdriver
Sharp razor blade with handle

Remove

1. Remove the keyboard.
2. Use the razor to cut the glue securing the speaker to the case. Be careful not to damage the speaker, its wires, or the logic board.
3. Insert a small screwdriver under the rear lip of the speaker and pop it out of its plastic retaining clips.

Replace

1. Place the speaker so that the wires are toward the bottom of the IIc case and the top lip is under the top plastic clip on the case.
2. Press on the bottom lip until it pops under the two lower clips.
3. Replace the keyboard.

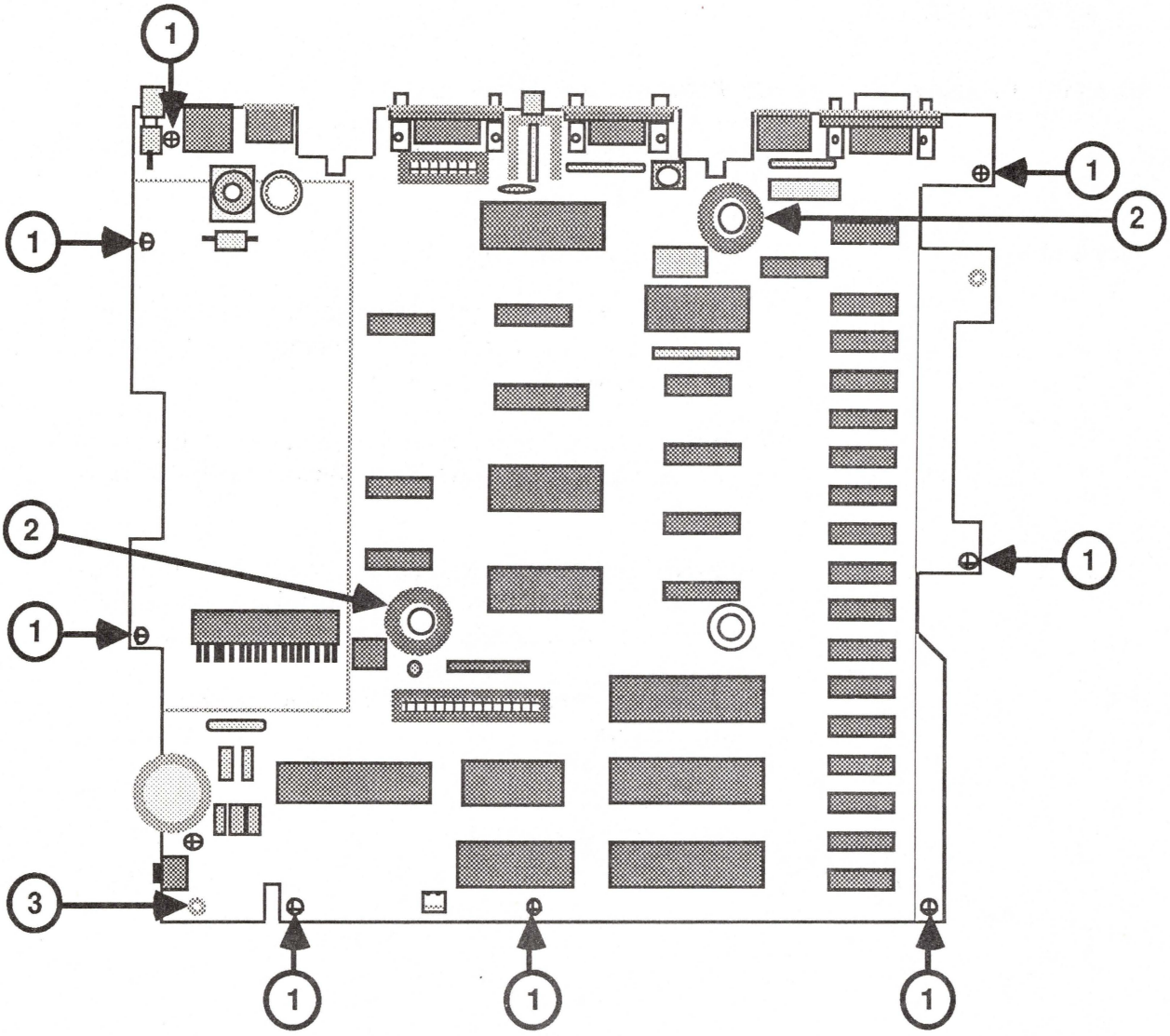

FIGURE 7

❑ LOGIC BOARD

Materials Required

#2 Phillips screwdriver

Remove

1. Remove the top cover.
2. Remove the keyboard and Memory Expansion Card (if present).
3. Remove the disk drive.
4. Remove the internal power supply.
5. Disconnect the speaker cable.
6. Remove the screws that attach the logic board to the case (Figure 7, #1). Depending on the version of logic board installed, there will be either eight or nine screws.
7. Remove the two wire-mesh toroids (Figure 7, #2).
8. Carefully remove the logic board by lifting it off its posts and then pulling it out to the right. Be careful of the small post at the front, near the headphone connector (Figure 7, #3).

Replace

Note: Prior to installing a new logic board in the computer, verify that three rubber feet have been installed on the solder side of the board. If there are no rubber feet present, refer to "Logic Board Rubber Feet Installation" in Section 6, Additional Procedures, for installation instructions.

1. Slide the logic board into place, left side first, making sure the headphone connector is properly seated and that the board is seated on all posts.
2. Connect the speaker cable.
3. Replace the two wire-mesh toroids on their posts.

   Note: The toroids must be on the correct posts to ground the disk drive.

4. Install the screws that attach the logic board to the case. Start each screw before tightening them down

5. Replace the internal power supply.

6. Replace the disk drive.

7. Replace the keyboard and Memory Expansion Card (if applicable).

8. Replace the top cover.

❑ VOLUME CONTROL

Materials Required

#2 Phillips screwdriver
Soldering iron
60/40 Rosin core solder
Desoldering tool

***CAUTION:** If you are not familiar with basic soldering skills, DO NOT attempt this procedure.*

Remove

1. Remove the logic board.

2. Locate the volume control on the logic board. Turn the logic board over and carefully desolder the three volume control leads.

3. Turn the logic board over again (component side up) and remove the volume control.

Replace

1. Insert the three leads of the volume control into their respective solder holes on the logic board.

2. Hold the knob in place as you turn the logic board over. Position the logic board so that the interface connectors and the two capacitors (near the power switch) hang over the edge of the desk. Allow the volume control to rest against the top of the work surface.

3. Solder the three volume control leads to the logic board.

3. Solder the three volume control leads to the logic board.

4. Check to see that there are no cold solder joints and that the body of the control is flush against the logic board.

5. Replace the logic board.

❑ POWER SWITCH

Materials Required

#2 Phillips screwdriver
Soldering iron
60/40 Rosin core solder
Desoldering tool

CAUTION: *If you are not familiar with basic soldering skills, DO NOT attempt this procedure.*

Remove

1. Remove the logic board.

2. Orient the logic board so that the interface connectors are facing away from you.

3. Locate the power switch at the upper left corner of the board.

4. Turn the logic board over and desolder the five leads coming from the power switch.

5. Turn the board over again (component side up) and remove the switch. If the switch offers too much resistance, gently rock it back and forth until it is loose enough to be easily removed.

Replace

1. Insert the five leads from the power switch into their respective solder holes in the logic board.

2. Hold the switch against the logic board so that the body of the switch remains flush against the board. Turn the board over.

3. Solder the five leads to the logic board.

4. Check to see that there are no cold solder joints, and that the body of the switch is flush against the logic board.

5. Replace the logic board.

Apple Technical Procedures

Apple IIc

Section 3 – Preventive Maintenance

❑ CONTENTS

3.2 Introduction
3.2 Disk Drive Read/Write Head
3.3 Disk Drive Head Load Button

❑ INTRODUCTION

The preventive maintenance procedures for the IIc all relate to the internal and external disk drives. The read/write head should be cleaned any time the computer or disk drive is being serviced. The head load button should be replaced whenever it is worn or dirty.

❑ DISK DRIVE READ/WRITE HEAD

Materials Required

Cotton swabs
Isopropyl Alcohol (80% alcohol/20% water)

Procedure

1. Remove the disk drive. (see Section 2, Take-Apart or, for the external drive, "Disk Drive" in *Disk IIc Technical Procedures*, Section 1, Take-Apart.)

2. Remove the four screws, two from either side of the disk drive shield.

3. Pull up on the shield to remove it.

4. Clean the guide rails with the isopropyl alcohol. **Do not** use grease.

5. Inspect the head for worn or dull spots in the ceramic. If you find any, replace the mechanical assembly. See Section 2, Take-Apart.

6. Clean the head with the isopropyl alcohol.

7. Inspect the motor drive belt for cracks, slippage, and elasticity. If the belt is dry or cracked, or if it slips, replace the mechanical assembly. See Section 2, Take-Apart.

8. Move the read/write head assembly back and forth along the full length of its travel. Check for any blockage or friction. If there is any, replace the mechanical assembly. See Section 2, Take-Apart.

❑ DISK DRIVE HEAD LOAD BUTTON

Check the head load button for contamination and wear. If the button is worn or dirty, replace it.

Materials Required

Needlenose pliers
Head load button

Procedure

1. Remove the disk drive. See Section 2, Take-Apart.
2. Remove the four screws, two from either side of the disk drive shield.
3. Pull up on the shield to remove it.
4. Lift up the head load arm. If the head load button is worn or dirty, squeeze the top part of the load button with small needlenose pliers and let the button drop down.
5. Insert the new load button through the hole in the shield plate and into the head load arm. Press the button until it snaps into place.
6. Replace the drive shield, ground clip, and corresponding screws.
7. Replace the disk drive. See Section 2, Take-Apart.

Apple Technical Procedures

Apple IIc

Section 4 – Diagnostics

❑ CONTENTS

4.2 Introduction
4.3 Things to Remember
4.3 Before You Begin
4.3 Setting Up
4.4 While Testing
4.5 Built-In Diagnostic
4.5 Running the Diagnostic
4.5 Results
4.6 Apple IIc Diagnostic Diskette
4.6 Materials Required
4.6 Main Menu
4.7 Choose Tests
4.10 Options
4.10 Special
4.11 Running the Diagnostics
4.15 Test Failures

❑ INTRODUCTION

This section describes general procedures for using the Apple IIc Diagnostic, either 5.25- or 3.5-inch, on the Apple IIc. This diagnostic allows you to select the tests you wish to run and the order in which you wish to run them. It also allows you to run a continuous test, which is valuable for pinpointing the causes of intermittent failures.

> ***Note:*** The 3.5-inch diskette can also run on the Apple IIGS™ and the Apple IIe. The 5.25-inch diskette can run on the Apple IIe. Refer to the *Apple IIGS and Apple IIe Technical Procedures* for more information.

❑ THINGS TO REMEMBER

Before You Begin

1. Make a backup diskette before beginning! When testing a defective Apple IIc, it is possible to erase and damage sections of the diskette. Use *System Utilities* (revision 2.1.1 or higher) to make the backup copy.

2. Before you boot the diskette-based diagnostics, run the built-in diagnostics.

3. The diagnostic can be run from either the internal 5.25-inch disk drive or an external UniDisk 3.5.

4. Make sure the keyboard switch is not depressed (Sholes layout). If it is, the keyboard diagnostic will not work correctly.

Setting Up

1. If you are going to select the **Serial External Test**, the loopback cable must be installed.

2. If you are going to select the **Apple IIc Memory Expansion Card Test**, the memory card must be installed and selected. Refer to Section 6, Additional Procedures, for more information.

3. To select a test, type the letter or use the arrow keys until the name of the test is highlighted; then press <Return>.

4. When chosen, each test displays a number (1, 2, 3, etc). This number indicates the order in which the test will be performed.

5. To deselect a test, type the letter or use the arrow key until the name of the test is highlighted; then press the <Delete> key. The test sequence numbers displayed will be corrected automatically. To deselect all tests, press <Open-Apple> and <Delete>.

6. To access the **Help** screen, hold down <Shift> and <Open-Apple> and press ?.

While Testing

1. Where input is required to start the next test (after video tests, for example), press <Space>.

2. To abort any test, press <Escape>. The testing will stop upon completion of the test in progress.

3. If you select the looping function and have selected a test that needs a loopback cable or card (Serial External Test, External Memory Card RAM Test) and the cable or card is not installed, you will receive an error code.

4. When running the Character Generator Test and using a ColorMonitor IIc or AppleColor™ Monitor IIc, the video display shifts left and right and toggles between color and monochrome. (This is the normal result of the method used to display the Character Set Test.)

   To make the display easier to view, depress the White Only switch during the Character Generator Test, and release the switch during all other tests.

❑ BUILT-IN DIAGNOSTIC

Before you boot the diskette-based diagnostics, run the built-in diagnostic. This will verify that the RAM, ROM, MMU, and IOU are functioning correctly.

Running the Diagnostic

To run the built-in diagnostic, hold down the <Open-Apple> and <Closed-Apple> keys while turning on the power. (To run them when the power is already on, hold down the <Control><Open-Apple><Closed-Apple> and <Reset> keys. Release the <Reset> key first, then the other keys.)

The screen will display various patterns and colors for approximately one minute. The RAM, ROM, MMU, and IOU circuitry on the logic board are being tested.

Results

The results, shown in the center of the display, will be either **System OK** (accompanied by a high-toned beep) or the name of the failed component (with a low-toned beep).

Test Passed

If you can access the built-in diagnostics and you receive the message **System OK,** continue with this section.

Test Failed

If you cannot access the built-in diagnostics or you receive a message other than **System OK**, exchange the logic board and try again.

❑ APPLE IIc DIAGNOSTIC DISKETTE

Materials Required

Apple IIc Diagnostic diskette
Video display and cable
Serial Loopback Cable (required for Serial External Test)
Apple IIc Memory Expansion Card (required for Memory Expansion Card Test)
AppleMouse™ IIc (Optional)
Hand Controllers II (Optional)
Joystick II (Optional)

Main Menu

The *Apple IIc Diagnostic* main menu is shown below.

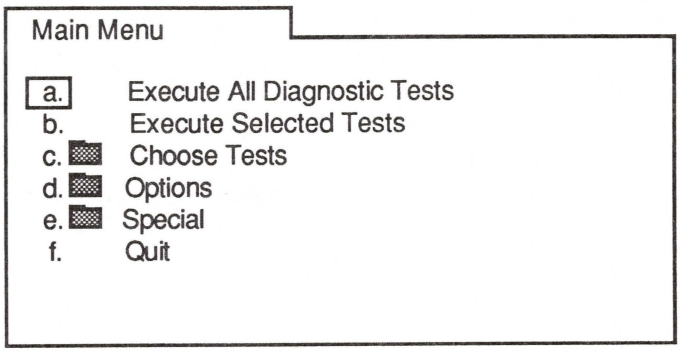

The following is a list of each item in the main menu, along with a brief description of what it is used for.

Execute All Diagnostic Tests – Runs the standard tests for the Apple IIc.

Execute Selected Tests – Runs the tests selected in **Choose Tests.**

Choose Tests – Contains all the tests that can be selected for the Apple IIc. Used to select one or more tests for customized testing.

Options – Contains various selections that allow you to control how the tests are run.

Special – Contains various options for keeping track of errors generated, for saving a test sequence, and for loading a test sequence from a diskette.

Quit – Stops all testing and reboots the system.

Choose Tests

The **Choose Tests** folder is shown below.

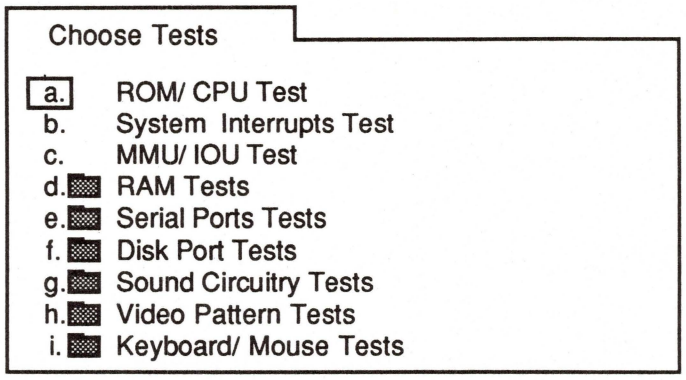

The following is a list of each item in the **Choose Tests** folder, along with a brief description of each.

ROM/CPU Test – Checks the ROM and CPU.

System Interrupts Test – Checks that interrupts are functioning correctly.

MMU/IOU Test – Checks the Memory Management Unit and the Input/Output Unit.

RAM Tests Folder

RAM Tests – This folder contains the following:

- Main Logic Board RAM Test – Checks the 128K on the logic board.
- Apple IIc Memory Expansion Card Test – Checks the RAM on an Apple IIc Memory Expansion Card (if installed). Testing takes approximately 45 seconds for each 256K. Refer to Section 6, Additional Procedures, for more information.

Serial Ports Folder

Serial Ports Tests – This folder contains the following:

- Serial Internal Test – Checks the logic board circuitry that handles the serial ports.
- Serial External Test (Loopback cable is required) – Checks the ports to be sure they are sending and receiving data correctly.

Disk Port Folder

Disk Port Tests – This folder contains the following:

- Disk Port Test – Checks the drive circuitry on the logic board for all 3.5- or 5.25-inch drives that are attached to the system. The diskette in the drive being tested must be ProDOS® formatted.

Sound Circuitry Folder

Sound Circuitry Tests – This folder contains the following:

- Speaker Tone Test – Checks the speaker by playing a sequence of beeps.

Video Pattern Folder

Video Pattern Tests – This folder contains the following:

- Color Bar Test – Displays vertical color bars with the name of each color below.
- Character Generator Test – Displays the full character set.

  Note: When running the Character Generator Test and using a ColorMonitor IIc or Composite Monitor IIc, the video display shifts left and right and toggles between color and monochrome. (This is the normal result of the method used to display the Character Set Test.)

  To make the display easier to view, depress the White Only switch during the Character Generator Test, and release the switch during all other tests.

- 80/40 Column Text Test – Displays 15 lines of characters. When the 40/80 column switch is depressed, 40 columns are displayed. When the switch is released, 80 columns are displayed.

- Low Resolution Graphics Test – Displays both pages (one and two) of low-resolution graphics with bars at the top of the screen.

- High Resolution Graphics Test – Displays both pages (one and two) of high-resolution graphics using a grid of 9 vertical lines intersected by 8 horizontal lines.

- Double High Resolution Graphics Test – Displays a grid of 18 vertical lines intersected by 8 horizontal lines.

Keyboard/Mouse Folder

Keyboard/Mouse Tests – This folder contains the following:

- Keyboard Test – Displays a keyboard layout. The instructions are given at the bottom of the screen.

- Languages – Displays a list of languages available for the keyboard tests. The default setting is U.S.A. English.

- Mouse Test – Displays a pointer that can be moved around the screen and a box that indicates whether the mouse button is pressed or not.

- Joystick/Paddle Test – Displays a pointer that can be moved around the screen and a box that indicates whether the joystick/paddle buttons are pressed or not. If testing paddles, verify that both reach the full range possible (0-FF).

Options

When the **Options** folder is open, the following list of selections appears on the screen.

- Loop Tests Until ESC Is Pressed
- Continue On Error Until ESC

If an option is selected, a check mark appears beside the item. To deselect an option, just select the same option again.

Special

The following is a list of selections that appears when the **Special** folder is opened.

- Display Error Log – Displays the names of the tests that have failed since the last clearing of the error log (up to 255 names).
- Clear Error Log – Erases the error log from RAM.
- Clear Testing Status Line – Clears the iterations and failure counts displayed on the main menu.
- Display Current System Status – This indicates the type of system, the ROM version, the amount of memory available and whether a Memory Expansion Card is installed.
- Load Selected Test Sequence from Disk – This will load a previously saved test sequence. The sequence can then be executed.
- Save Selected Test Sequence to Disk – This will save a test sequence you have selected to the test diskette.

When any of these items is selected and <Return> is pressed, the action is performed.

Running the Diagnostics

The diagnostic program can be configured in various ways. All the tests can be run in their automatic sequence, or selected tests can be looped or run in an order you specify.

The diagnostic also has the ability to execute a test selection sequence that has been saved to the test diskette. Saved test sequences make it easier to test specific items that require non standard tests (see "Customized Tests," below).

Standard Test

1. Install the Serial Loopback Cable and the Memory Expansion Card, if available.

   If they are not available, type N when the diagnostic asks you if they are installed. The testing will continue.

2. Insert the *Apple IIc Diagnostic* into either the internal or external disk drive. To run the diagnostic from the internal disk drive, turn on the computer. To run the diagnostic from the UniDisk 3.5, leave the internal drive door open.

3. Type the letter a or use the arrows to highlight **Execute All Diagnostic Tests**, and press <Return>.

   To continue after certain tests (for example, Speaker or Video Patterns), press <Space>.

   If an error is encountered, the testing will stop and an error message will be displayed in an alert box. Refer to "Test Failures" at the end of this section for the appropriate actions to perform.

4. On completion, the message **Testing finished** will be displayed in the alert box.

Customized Test

1. If you are going to test the serial ports and the Memory Expansion Card, install the serial loopback cable and the memory card.

2. Insert the *Apple IIc Diagnostic* into either the internal or external disk drive. To run the diagnostic from the internal disk drive, turn on the computer. To run the diagnostic from the UniDisk 3.5, leave the internal drive door open.

3. Type the letter c or use the arrows to highlight **Choose Tests**, and press <Return>.

4. From this menu, use the letters or arrows to highlight the first three tests (if desired), and press <Return> to select them.

   Use the letters or arrows to highlight the other test folders and press <Return> to display them. Use the letters or arrows to highlight the tests you wish to run from each folder and press <Return> to select them.

   If you wish to deselect a test, use the letters or arrows to highlight the test and press the <Delete> key. To deselect all tests, press <Open-Apple> <Delete>.

5. To save your customized test sequence, return to the main menu, and select **Special**. Select **Save Selected Test Sequence to Disk** and press <Return>.

   You now have the selected test sequence saved on the diskette. The sequence may be loaded using **Load Selected Test Sequence From Disk** at a later date when it is needed.

6. On completion, return to the main menu, select **Execute Selected Tests,** and press <Return>.

   To continue after certain tests (for instance, speaker or video patterns), press <Space>.

   If an error is encountered, the testing will stop and an error message will be displayed in an alert box. Refer to "Test Failures" at the end of this section for the appropriate actions to perform.

7. On completion, the message **Testing Finished** will be displayed in an alert box.

Continuous Test

A continuous test is possible with all but the Keyboard/ Joystick Tests. Select the tests you wish to loop by following the instructions under "Customized Test" (see above). Follow the steps below to run a continuous test.

1. After the diagnostic is configured, return to the main menu and select **Options**.

2. Select **Loop Tests Until Esc Is Pressed**

   A check mark should appear indicating that it has been selected.

3. Selecting **Continue on Error until Esc** will cause the diagnostic to continue running regardless of an error until <Escape> is pressed. If you wish the diagnostic to stop on an error, make sure this option is not checked.

   Errors will be logged to RAM.

4. Return to the main menu; select **Execute Selected Tests** and press <Return>.

   The tests will run continuously (depending on your selection in step 3) until an error is encountered or <Escape> is pressed.

   If you press <Escape> to stop the testing, you can then check for error codes by selecting **Special** followed by **Display Error Log**.

   Highlight either the video display or the printer for a listing of the errors encountered.

5. If you are going to run the test again, be sure to clear the error log and the status line and to reselect **Loop Tests Until Esc Is Pressed** before returning to the main menu.

❑ TEST FAILURES

When a test fails, a message will be displayed indicating which one failed. The following is a list of the tests along with the recommended remedial actions for each if it fails.

Failed Tests	Remedial Action
• *Rom/CPU*	– Exchange logic board.
• *System Interrupts*	– Exchange logic board.
• *MMU/IOU*	– Exchange logic board.
• *Main Logic Board RAM*	– Exchange logic board.
• *Extended Memory*	1. Refer to Section 6, Additional Procedures, for more information. 2. Exchange logic board.
• *Serial Internal*	1. Refer to Section 6, Additional Procedures, "Logic Board Rubber Feet Installation." 2. Exchange logic board.
• *Serial External*	1. Refer to Section 6, Additional Procedures, "Logic Board Rubber Feet Installation." 2. Verify that the loopback cable is installed. 3. Exchange loopback cable. 4. Exchange logic board.

Failed Tests	Remedial Action
• *Disk Port*	1. Verify that the diskette is inserted and the drive door is closed. 2. Verify that the diskette is not write protected. 3. Exchange logic board. 4. Exchange disk drive.
• *Speaker Tone*	1. Check volume setting. 2. Check speaker connections. 3. Exchange logic board. 4. Exchange speaker.
• *Keyboard*	1. Rerun test to verify results. 2. Check keyboard switch position. 3. Exchange keyboard. 4. Exchange logic board.
• *Mouse*	1. Check mouse connections. 2. Exchange mouse. 3. Exchange logic board.
• *Joystick/Paddle*	1. Check joystick/paddle connections. 2. Exchange joystick/paddle. 3. Exchange logic board.

Apple Technical Procedures

Apple IIc

Section 5 – Troubleshooting

❑ CONTENTS

5.2 Introduction
5.2 General Information
5.2 Before You Start
5.2 How to Use the Symptom Charts
5.3 Things To Remember
5.3 Symptom Chart
5.3 Video Problems
5.3 Drive Problems
5.3 Peripheral Problems
5.4 Miscellaneous Problems
5.5 Special Problem Symptom Chart

❑ INTRODUCTION

General Information

These procedures provide guidelines for troubleshooting the Apple IIc personal computer using the following tools:

- Apple II Diagnostic Diskette
- Symptom/Corrective Action Charts

Before You Start

Read the section entitled "Things to Remember" before you begin troublshooting. There are a number of things you should know about the Apple IIc to troubleshoot the system effectively.

How to Use the Symptom Charts

The *Symptom Chart* describes symptoms and appropriate steps to take to correct the failure. The *Special Problem Symptom Chart* describes unusual symptoms that may appear on older model Apple IIc computers (those with model number A2S4000).

When swapping out modules, remove the suspected faulty module and replace it with a known-good spare module from your service stock. If the problem still occurs, remove the replacement module, re-install the original module in the IIc, and try swapping out the next module on the list. Repeat the procedure until the problem no longer occurs. The module you replaced just before the problem disappeared is the faulty one. As a final check of the system, run the Apple II Diagnostic Diskette.

❑ THINGS TO REMEMBER

1. Follow the basic ESD precautions when troubleshooting. (Refer to Section 1, Basics, for more information.)

2. Be sure the power is off before installing or removing any modules or components, or before connecting or disconnecting any peripheral devices.

❑ SYMPTOM CHART

Video Problems

• *No video*	– Exchange logic board.
• *Random monitor display*	1. Exchange logic board. 2. Exchange keyboard.

Drive Problems

• *Will not boot*	1. Exchange disk drive. 2. Exchange logic board.
• *No disk access*	1. Exchange logic board. 2. Exchange disk drive.
• *Continuous disk access*	1. Exchange disk drive. 2. Exchange logic board.

Peripheral Problems

- *Mouse problems*
  1. Exchange mouse.
  2. Exchange logic board.

- *Printer prints garbage*
  1. Verify configuration of printer port.
  2. Verify configuration of printer option switches.
  3. Is the correct cable being used?
  4. Refer to Section 6, "Logic Board Rubber Feet Installation."

Miscellaneous Problems

- *No power*
  1. Exchange AC power pack.
  2. Exchange internal power supply.
  3. Exchange logic board.

- *Applesoft BASIC errors*
  – Exchange logic board.

- *Stuck keys*
  – Exchange keyboard.

- *Programs run erratically, crash often*
  1. Exchange disk drive.
  2. Exchange logic board.

❑ SPECIAL PROBLEM SYMPTOM CHART

Certain failures that occur on older model (A2S4000) IIc's can be solved using the symptom chart below. The left column lists the nature of the failure. The right column refers to the procedure in Section 6 that can be used to correct the failure.

• *Flashing screen or wavy lines on a IIc monitor*	Section 6, AC Power Pack Upgrade
• *When using any serial printer or non-Apple modem:* *a. lost characters* *b. transmission errors* *c. characters overrun each other.*	Section 6, Serial Port Upgrade
• *IIc repeatedly fails to boot, or has difficulty reading or writing.*	Section 6, Upper Head Shield Plate Installation
• *Power supply is turned "OFF" and the power supply turns back on by itself.*	Section 6, Internal Power Supply Upgrade
• *Can't access UniDisk 3.5 disk drive.*	Section 6, UniDisk 3.5 Compatibility

Apple Technical Procedures

Apple IIc

Section 6 – Additional Procedures

❑ CONTENTS

6.2 Apple IIc - Model A2S4100
6.2 Memory Expansion Card Installation
6.6 Diagnostics and Troubleshooting
6.9 Logic Board Rubber Feet Installation
6.10 Apple IIc - Model A2S4000
6.10 UniDisk 3.5 Compatibility
6.10 Serial Port Upgrade
6.10 AC Power Pack Upgrade
6.11 Internal Power Supply Shield Retrofit
6.12 Upper Head Shield Plate Installation
6.16 Internal Power Supply Upgrade
6.17 Expandable Logic Board Installation

Note: If a step is underlined, detailed instructions for that step can be found in Section 2, Take-Apart.

❑ APPLE IIc - MODEL A2S4100

Memory Expansion Card Installation

The Apple IIc Memory Expansion Card can be used with any Apple IIc that has a logic board containing the memory expansion connector (see Section 1, Basics, "Theory of Operation"). This card supports the addition of RAM memory in increments of 256K, to a maximum of 1,024K (1 megabyte) with 256K as the minimum configuration available. (For further information on the features of the Memory Expansion Card, refer to the *Apple IIc Memory Expansion Card Owner's Manual*, which accompanies the card.)

Things to Remember

1. The Memory Expansion Card has ICs that are **highly susceptible to damage from electrostatic discharge**. Ground yourself by touching the internal power supply case before you pick up or install the Memory Expansion Card. To further prevent any damage from electrostatic discharge, place the board in an antistatic bag before carrying it anywhere.

2. The Memory Expansion Card exchange module is shipped configured with 256K of RAM. Any additional RAM is considered a replaceable part. 256K RAM chips are **highly susceptible to damage from electrostatic discharge.** Touch the internal power supply case before handling, removing, or installing the RAM chips. **Remember to remove any additional RAM from the board you are sending to Apple. Additional or defective RAM should not be sent in on the card.**

Configure the Memory Expansion Card

The Memory Expansion Card is shipped from Apple with 256K of RAM installed. To increase to 512K, 768K, or 1,024K, an appropriate number of *Apple II 256K Memory Expansion Kits* must be purchased and installed.

The RAM must be inserted in the correct sockets for the desired configuration. Remember to place the dot or indentation on the chip in the correct orientation for pin 1.

Only Apple RAM chips should be used. (Apple RAM has the letter *A* near pin 1.)

Install the RAM chips at their appropriate locations on the Memory Expansion Card. Refer to the Memory Configuration Chart for location information (Figure 1).

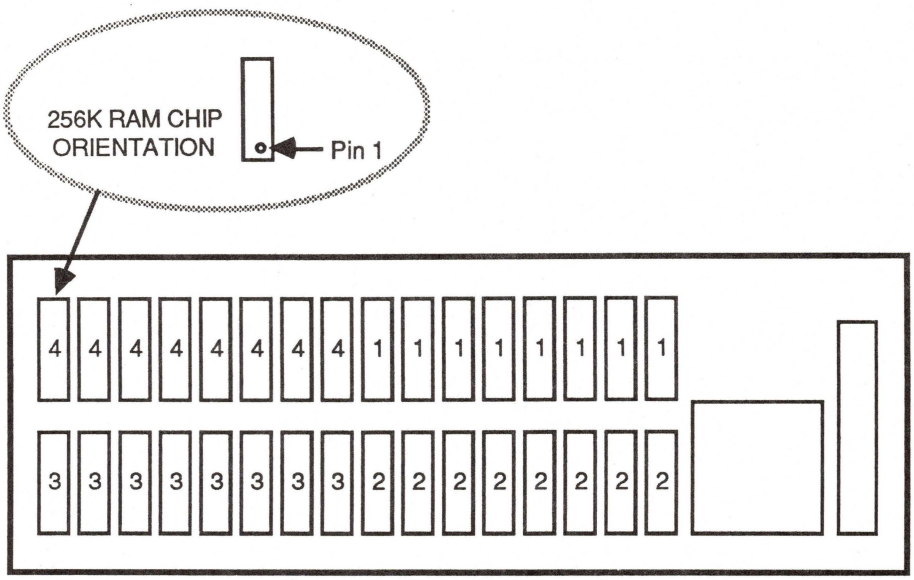

CARD SIZE	FILL BLOCK
256K	1
512K	1,2
768K	1,2,3
1024K	1,2,3,4

MEMORY CONFIGURATION CHART

FIGURE 1

Installation

Note: Apple IIc computers with model number A2S4100 have the connector and circuitry needed to install a Memory Expansion Card. Apple IIc computers with model number A2S4000 require a logic board upgrade **before** you install a Memory Expansion Card (see Section 6, Expandable Logic Board Installation).

1. Turn off the power and disconnect all cables from the back of the computer.

2. Remove the top cover.

3. Lift the front of the keyboard up and forward. Rest the keyboard upside down on the disk drive.

4. Insert the flared end of each stand-off into one of the four holes in the logic board, and press until it clicks into place. Repeat this for each of the three remaining stand-offs. Refer to Figure 2, #1 for stand-off locations.

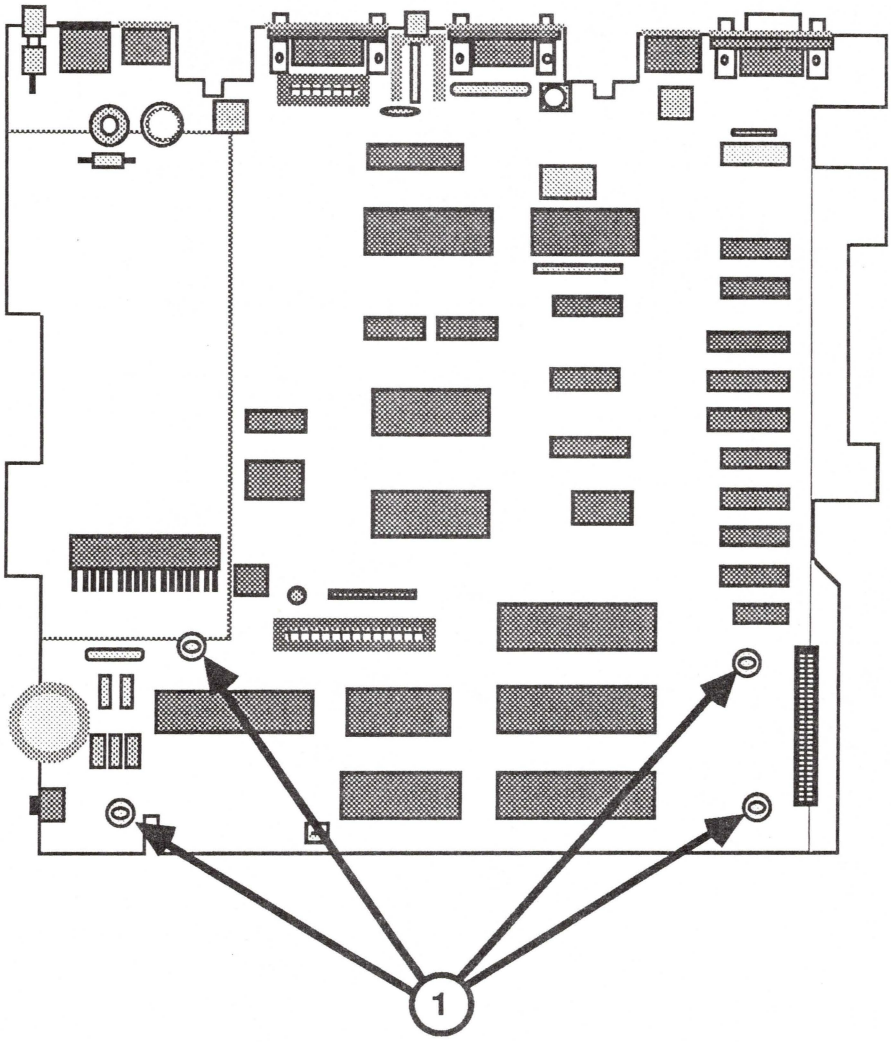

FIGURE 2

5. Install the four rubber feet supplied with the Memory Expansion Card using Figure A as a placement guide.

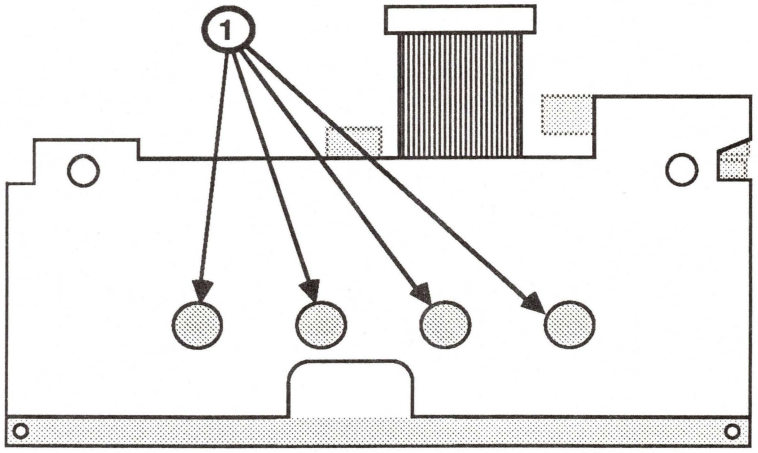

FIGURE A

6. Place the Memory Expansion Card on the four nylon standoffs, component side down and with the connector on the right side. **Gently** press down on the board starting at the connector side and then at each stand-off on the left side.

7. Replace the keyboard.

8. Run the *Apple II Diagnostic Diskette* to verify the correct operation of the card. (See "Diagnostics and Troubleshooting" later in this procedure.)

9. Replace the top cover.

10. Affix the appropriate memory ID sticker (Table 1) to the IIc case between the <OPEN APPLE> and accent mark keys.

Memory Expansion Card Size	Memory ID Sticker
256K	384K
512K	640K
768K	896K
1024K	1.15MB

Table 1

11. Return the IIc to the customer. Include the *Apple IIc Memory Expansion Card Instruction Manual*, "Tell Apple" and Warranty cards, *Apple II Utilities Guide*, and *ProDOS System Utilities Diskette*. **Do not give the Dealer's Installation Instructions or Packing List to the customer.**

Diagnostics and Troubleshooting

The Apple IIc Memory Expansion Card exchange module is shipped **without** socketed RAM. All socketed RAM must be removed from the card before returning it to Apple.

Materials Required

Known-good Apple IIc and Internal Drive
Known-good RAM chips
Apple IIc Memory Expansion Card
Apple II Diagnostic Diskette

Testing the RAM

1. Install the Apple IIc Memory Card into the memory slot.

2. Start up the *Apple II Diagnostic Diskette*. Select the **Apple IIc Memory Expansion Card Test** and run the test.

   Note: The ROM on the logic board is verified before the card is tested. If the ROM on the logic board is bad an alert box will appear telling you to test the logic board ROM before continuing. Refer to Section 3, Diagnostics.

...Continued on next page

3. Two types of failures are possible on the Apple IIc Memory Expansion Card:

   a) If a RAM chip fails, a numbered location on the board will be indicated on the screen (Figure 3).

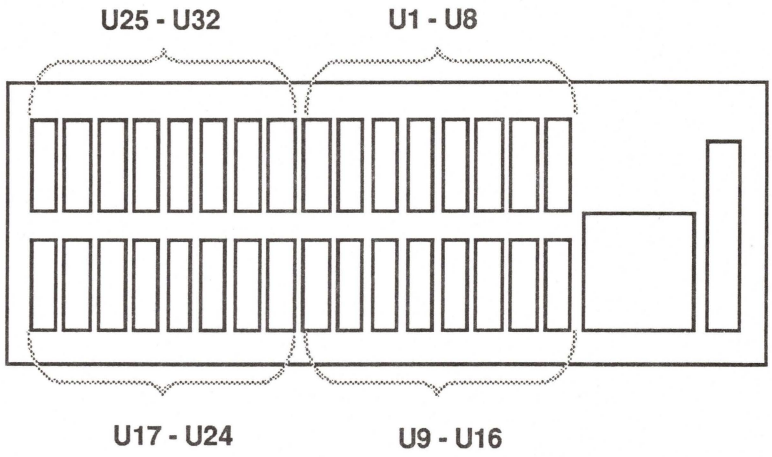

FIGURE 3

   1) Locate the RAM and replace it with a known-good RAM chip.

   2) Retest the card.

   3) Repeat steps 1) and 2) until the card passes.

   b) If the problem cannot be corrected by replacing a RAM chip, the screen will tell you to exchange the entire card.

   1) Remove all the RAM from the customer's card.

   2) Test the module being used for exchange.

   3) Install the customer's RAM onto the new module.

   4) Run the Apple IIGS Memory Expansion Card Test.

   5) Return to the beginning of this step until the card passes.

Logic Board Rubber Feet Installation

1. If the logic board is presently installed in the computer, remove the logic board.

2. Cut a piece of polyester tape about one inch long.

   Note: A roll of this tape can be ordered from Apple Service. See your *Service Programs Manual* for ordering information.

3. Place the tape over the metal shield at the location shown in Figure B, #1. It is important that the tape **completely** cover the circular area of the shield.

4. Place the three rubber feet at the locations shown in Figure B, #2.

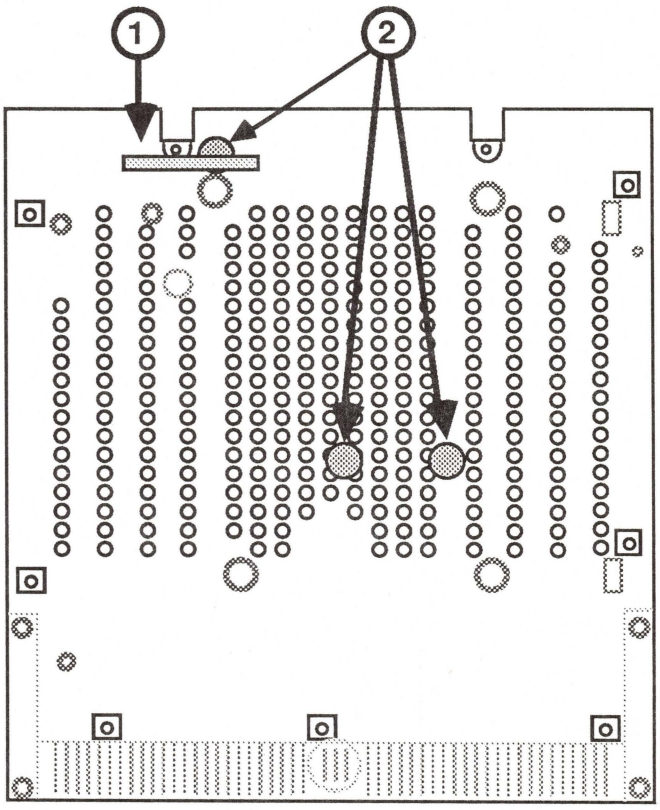

FIGURE B

❑ APPLE IIc - MODEL A2S4000

UniDisk 3.5 Compatibility

To utilize a UniDisk 3.5 with an Apple IIc, a new Monitor ROM is required. All new Apple IIc's (model A2S4100) have the ROM included. Apple IIc's, model A2S4000, with a serial number greater than F6051GFA, also contain the new Monitor ROM.

Customers with a UniDisk 3.5 who purchased an Apple IIc system with a serial number less than F6051GFA will need a ROM upgrade. Exchange the customer's logic board with an upgraded board free of charge. Refer to "Apple IIc Product Notices" in your *Apple Service Programs Manual* for additional information.

Serial Port Upgrade

If a customer has problems with devices connected to either of the Apple IIc serial ports, here's what to do:

1. Connect the serial device (printer or modem) to either a known-good Apple IIc or an Apple IIe with a Super Serial Card.

2. Try to transmit to the serial device.

   If the device works, swap the logic board of the Apple IIc in question. Refer to your *Apple Service Programs Manual* for exchange information.

   If the device does not work with the known-good IIc or IIe, the device, cabling, or configuration is faulty.

AC Power Pack Upgrade

If you encounter a flashing screen or wavy lines on a Monitor IIc, check the date code on the AC Power Pack. If the date code is earlier than **45 84**, exchange the AC Power Pack.

The date code is printed in black on the bottom of the AC Power Pack. The first two digits in the date code indicate the week and the last two digits indicate the year of manufacture.

Internal Power Supply Shield Retrofit

If the Apple IIc internal disk drive repeatedly has difficulty reading or writing a diskette, it might be because the IIc internal power supply is not properly shielded. Refer to Figure 4 to determine whether your power supply is shielded.

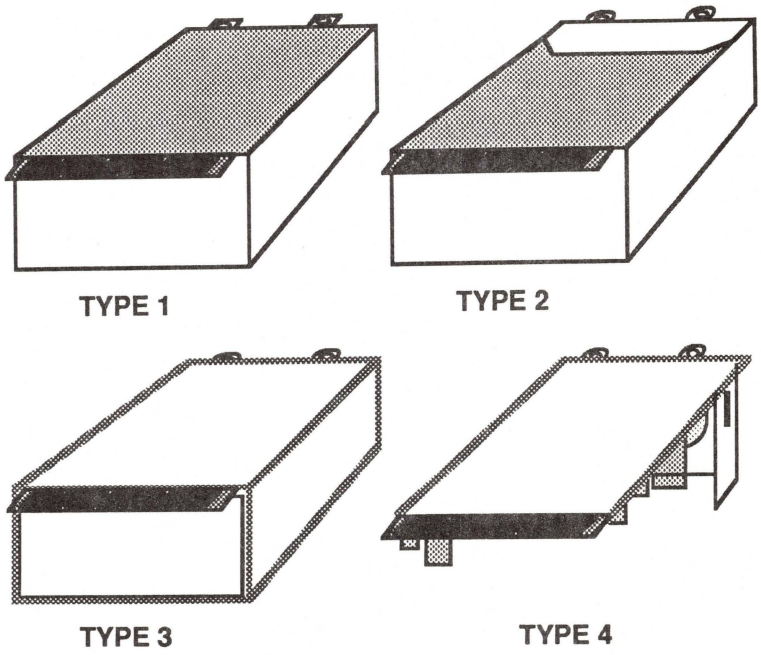

FIGURE 4

The power supply labeled *Type 1*, with the PC board totally exposed, is not shielded. *Type 2* is adequately shielded by the metal bracket across the back of the PC board. *Type 3* is shielded by being fully enclosed. *Type 4*, though completely open, is adequately shielded.

If you have a *Type 1* power supply, use the shield from the power supply in your IIc spares kit and order a new shield. If the drive continues to have reading/writing difficulty, the problem could be the disk drive.

Adding the Power Supply Shield

1. Remove the top cover.
2. Remove the internal power supply.
3. Turn the power supply so that the soldered side of the circuit board is facing up.
4. Slide the shield, hole side first, over the connector end of the power supply. When the shield is in position, you will be able to see **only** the circuit board, and no soldered areas, through the holes.
5. Replace the power supply.

After you put the shield on the customer's power supply, rerun the latest disk drive diagnostic to see if the problem has been fixed. If it has, replace the cover of the IIc.

If the problem has not been fixed, swap the disk drive. Rerun the disk drive diagnostic to verify that the problem has been fixed.

If the problem remains, replace the customer's power supply (without the shield) and disk drive, and send the unit to Apple.

Upper Head Shield Plate Installation

If the IIc repeatedly fails to boot or has difficulty reading or writing, the cause of the problem may be an unshielded disk drive read/write head assembly. To determine if the drive is shielded, lift the head load arm (Figure 5, #1), and compare it with Figures 6 and 7. Figure 6, with the metal plate installed on the head load arm, is completely shielded. Figure 7, without the metal plate installed, is unshielded.

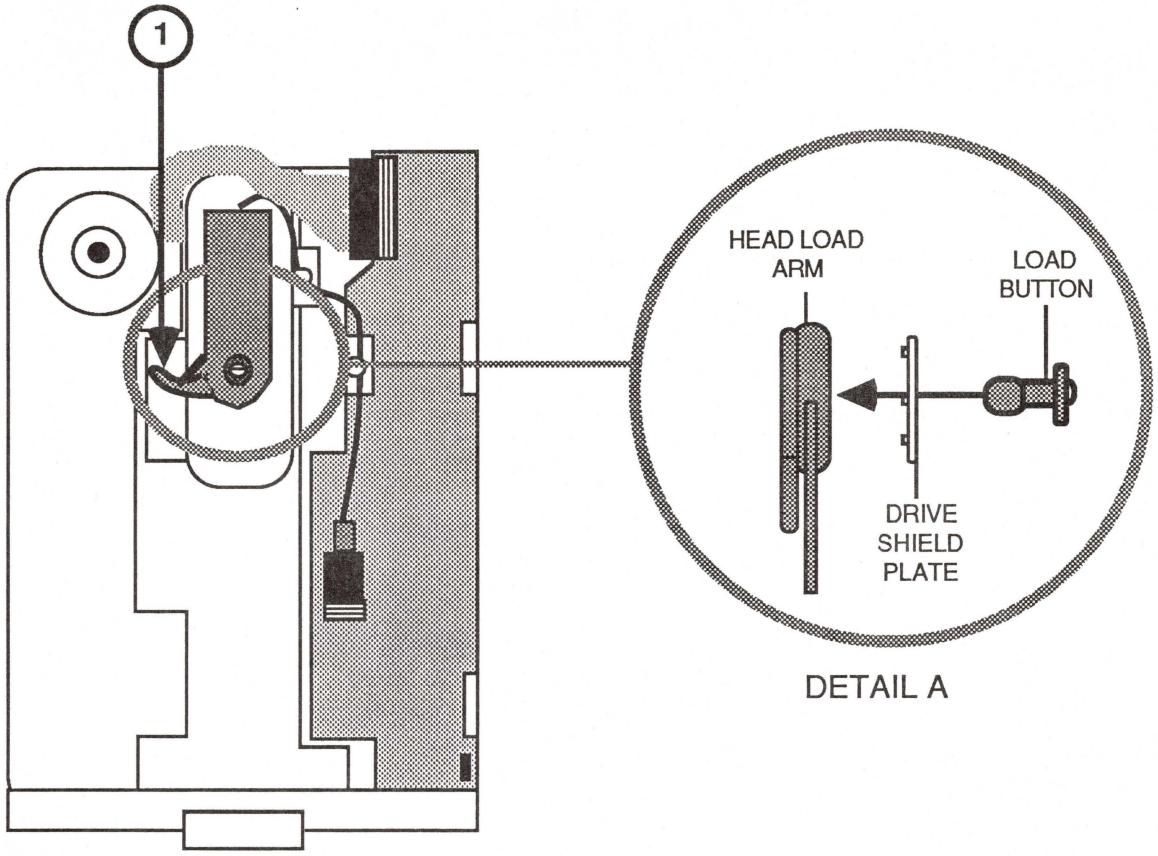

FIGURE 5

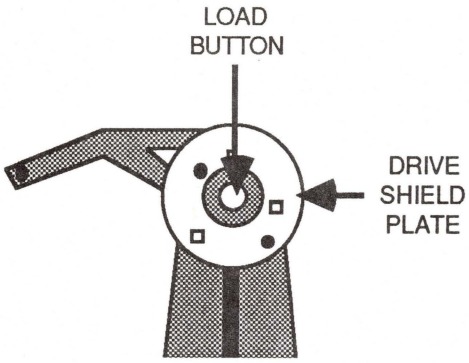

FIGURE 6

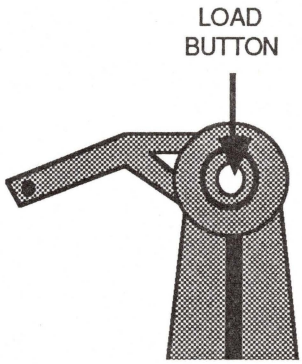

FIGURE 7

If your disk drive looks like Figure 7, install the upper head shield plate. If booting or read/write failures persist, replace the disk drive.

During this procedure, check the head load button for contamination and wear. If the button is worn or dirty, replace it.

Installation

1. Remove the top cover.
2. Remove the disk drive.
3. Remove the four screws, two from either side of the disk drive shield.
4. Pull up on the shield to remove it.
5. Lift up the head load arm, squeeze the top part of the load button with small needlenose pliers, and let the button drop down.
6. Place the upper head shield plate against the head load arm. The raised ridges should face the arm, and the circular opening should line up with the opening in the arm (Figure 8).
7. Reinstall the button (or install a new one if necessary). Insert it through the hole in the shield plate and into the head load arm (Figure 9, detail A). Press the button until it snaps into place.
8. Replace the disk drive shield, ground clip, and corresponding screws.
9. Replace the disk drive.
10. Replace the top cover.

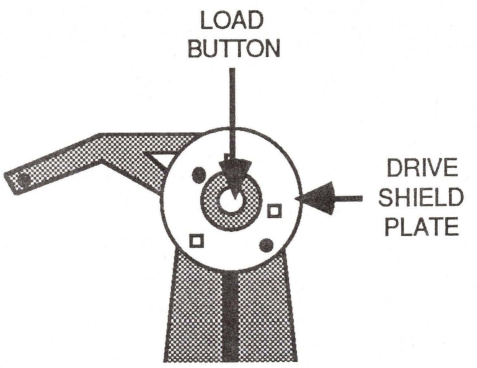

FIGURE 8

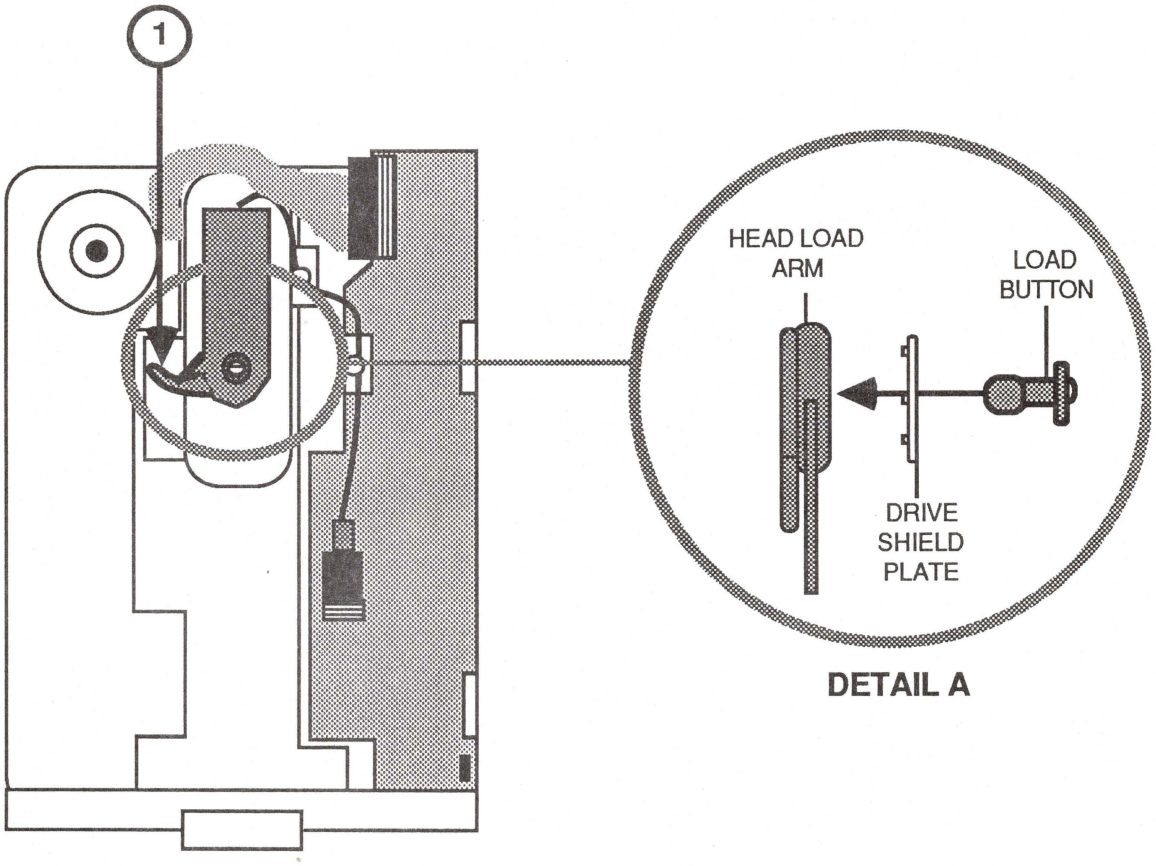

FIGURE 9

Internal Power Supply Upgrade

Check the customer's internal power supply for:

1. The marking "TDK" (Figure 10, #1).

2. A date code between 8501 and 8526 (Figure 10, #2). These power supplies occasionally turn themselves back on spontaneously. When they do, all RAM on the logic board can be damaged.

Note: Black ink markings in either place indicated in Figure 10, #3, designates a reworked power supply that has had the problem corrected. These power supplies do not need to be exchanged.

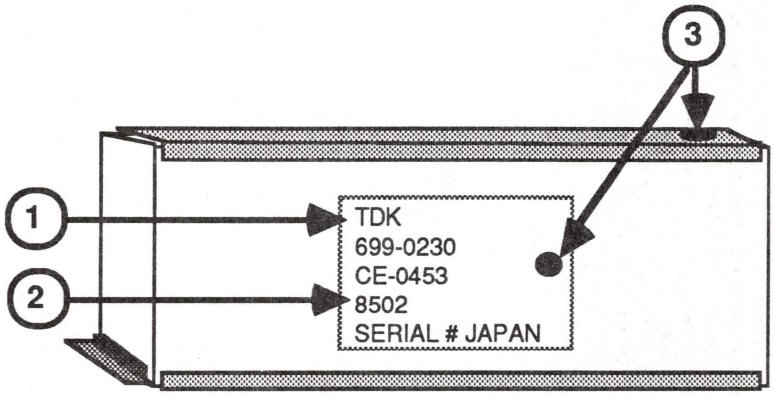

FIGURE 10

If the logic board is bad and the internal power supply meets the above criteria, exchange both modules.

If the logic board is good and the internal power supply meets the above criteria, exchange the internal power supply.

Expandable Logic Board Installation

The Apple IIc Logic Board Upgrade Kit contains an enhanced version of the original IIc logic board. The enhancement, an expansion connector, allows the addition of a Memory Expansion Card (see "Memory Expansion Card Installation" earlier in this section). This card yields a maximum memory configuration of 1.15 megabytes of RAM.

The Expandable Logic Board Upgrade Kit provides customers who own older versions of the Apple IIc with a cost-effective way to gain this memory expansion capability.

> ***Note:*** This upgrade will also permit the use of a UniDisk 3.5 with the Apple IIc.

Return Information

The old IIc logic board **must** be returned in the Apple-approved packaging for credit. The shipping instructions must be followed **exactly** as stated on the *Apple IIc Logic Board Upgrade Kit Product Return* form.

The logic board **must** be placed in an anti-static bag. Failure to do so could lead to ESD (electrostatic discharge) damage to the board.

Installation

1. Turn off the power to the IIc, and disconnect the power cord and any attached peripherals.
2. Remove the logic board.
3. Install the new Apple IIc logic board.

   Note: Some Apple IIc bottom cases contain an additional set of standoffs located underneath the internal power supply. If the IIc you are upgrading contains these standoffs, use a pair of diagonal cutters to cut them off **before** attempting to install the new logic board. (Do not confuse these extra standoffs with the two standoffs that the internal power supply is attached to.)
4. Replace the internal power supply.
5. Replace the disk drive.

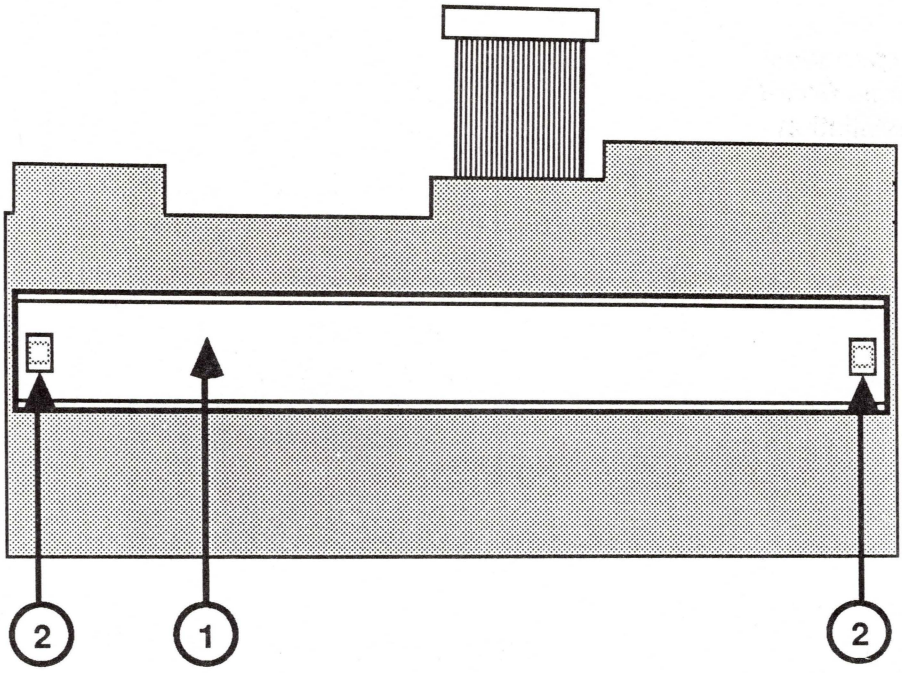

FIGURE 11

6. Some IIc keyboards have a plastic brace attached to the bottom (Figure 11, #1). Before reinstalling the keyboard, check to see if this brace is present. If it is, perform steps 6a through c, to replace the brace. If there is no brace, proceed to step 7.

   a) Using a pair of needlenose pliers, squeeze the nylon mounting button holding the brace to the keyboard. At the same time, pull the brace away from the keyboard (Figure 11, #2). Repeat for the other mounting button, and remove the brace.

   b) Insert the small end of the new mounting button through the hole at each end of the new brace.

   c) Place the new brace on the back of the keyboard. Align the holes in the brace with the two mounting buttons. Press down on the brace until it clicks into place.

7. Replace the keyboard..

8. Plug the power cord into the power socket.

9. Run the *Apple II Dealer Diagnostics*, Part Number 077-0232, to make sure the computer operates correctly.

   Note: Earlier versions of Dealer Diagnostics will not operate correctly on the enhanced IIc logic board and therefore will not test correctly.

10. Install the new FCC label on the bottom side of the IIc case. The label should cover the present label or engraving (Figure 12).

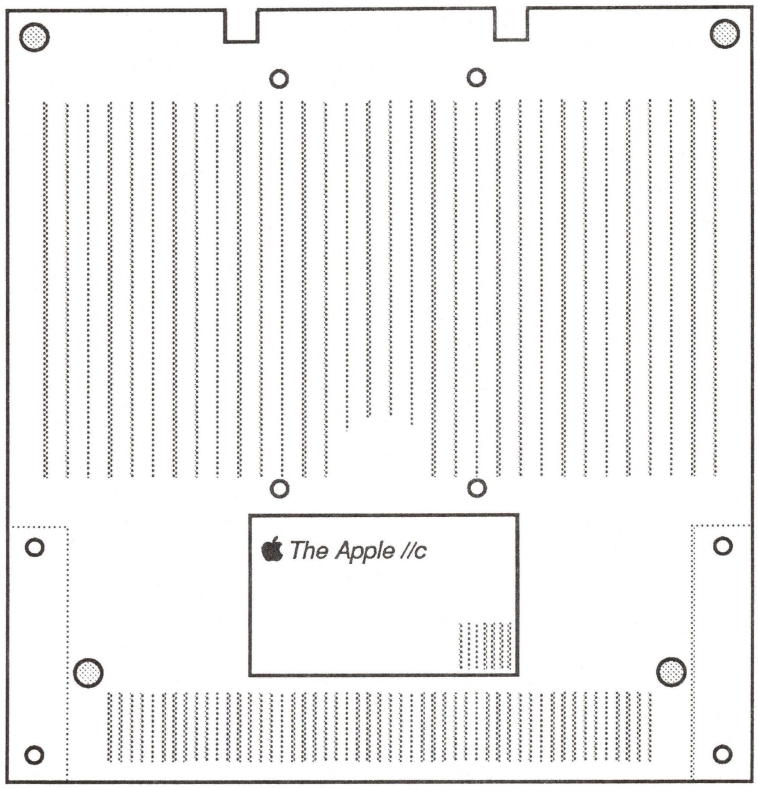

FIGURE 12

11. If you are installing a Memory Expansion Card, see the installation instructions earlier in this section, before you proceed to step 12.

12. Replace the top cover.

13. Return the IIc to the customer. Include the *New Features Update* and the Warranty card. **Do not give the dealer's installation instructions or packing list to the customer.**

Apple IIc

Section 7 – Illustrated Parts List

❑ CONTENTS

7.3 Finished Goods Assembly (Figure 1)
7.5 Memory Expansion Card (Figure 2)

The figures and lists in this section include all piece parts that can be purchased separately from Apple for the Apple IIc, along with their part numbers. These are the only parts available from Apple. Refer to your *Apple Service Programs Manual* for prices.

> ***Note:*** There are two types of keyboard for the Apple IIc: the original keyboard and the Alps keyboard. The original IIc keyboard rests on top of a black sheet of plastic. For that keyboard, order "Keycap Set, Beige." The Alps keyboards do **not** have a plastic sheet beneath the keyboard. For them, order parts specifically marked "Alps" on the Illustrated Parts List.

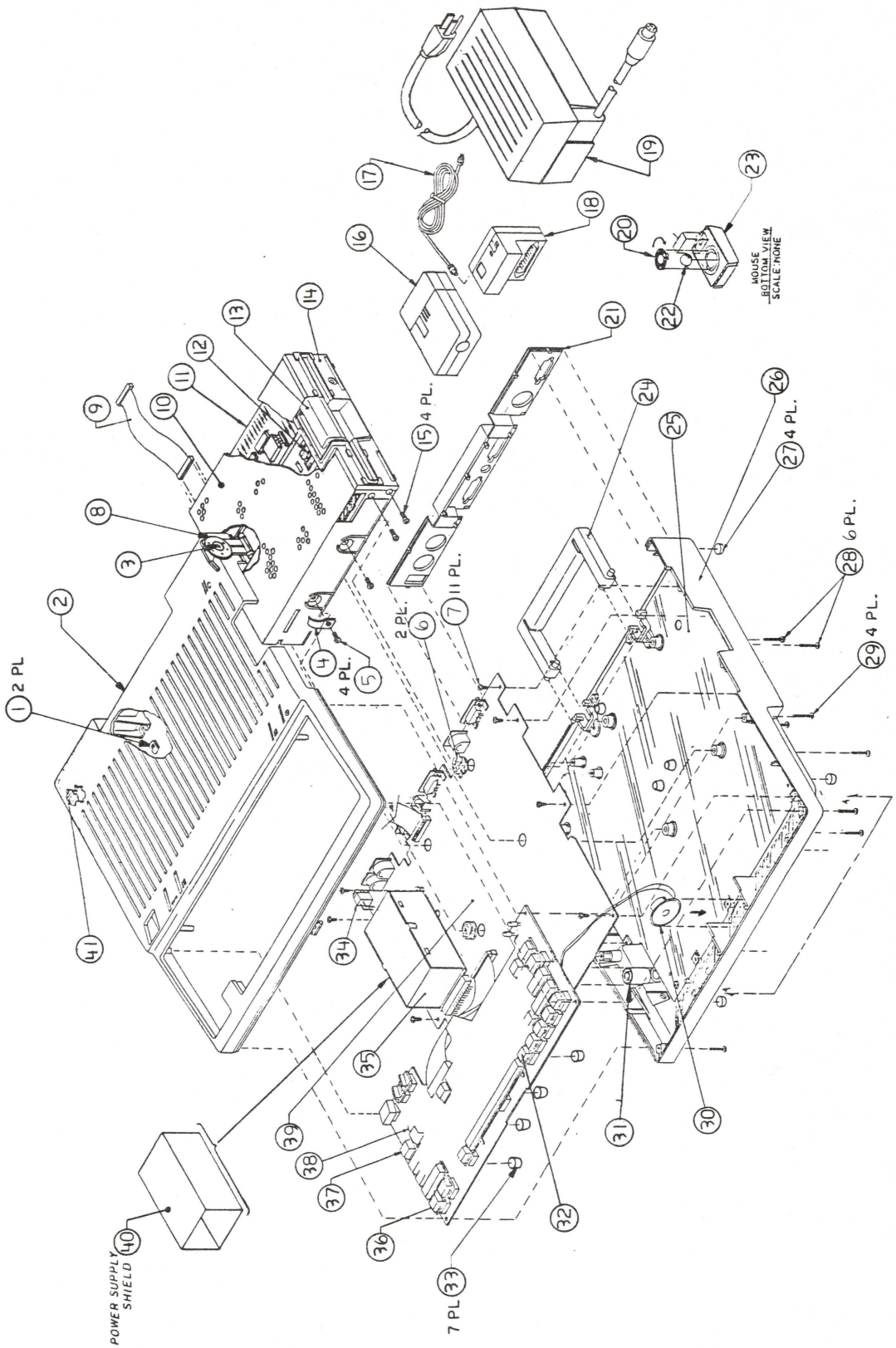
1 2 PL
2
3
4 4 PL.
5
6 2 PL.
7 11 PL.
8
9
10
11
12
13
14
15 4 PL.
16
17
18
19
20
21
22
23
MOUSE BOTTOM VIEW SCALE: NONE
24
25
26
27 4 PL.
28 6 PL.
29 4 PL.
30
31
32
33 7 PL
34
35
36
37
38
39
40 POWER SUPPLY SHIELD
41

❑ APPLE IIc – FINISHED GOODS ASSEMBLY (Figure 1)

Item	Part No.	Description
1	835-0174	U Type Nut
2	612-5029	Apple IIc Top Case with Back Panel
3	U815-0664	Load Button
4	805-0877	Ground Clip
5	400-1604	Screw, Disk Drive Shield
6	875-0049	Grounding Washer
7	430-1019	Tap Screw 4-24 x .250
8	805-5038	Upper Head Shield Plate
9	590-0181	Internal Disk Drive Cable
10	661-0264	Apple IIc Drive Mechanical Assembly
11	665-0265	Apple IIc Drive Analog Board
12	870-0023	Spring, Disk Door (Latch)
13	815-0811	Disk Drive Door (Latch), Beige
	815-0587	Disk Drive Door (Latch), Platinum
14	815-0810	Disk Drive Bezel
15	970-0473	Screw, Disk Drive Bezel
16	699-0242	RF Modulator Switch Box
17	699-0228	RF Modulator Cable
18	699-0220	RF Modulator
19	699-0424	AC Power Pack (110v)
20	815-0409	Mouse Ball Retainer
21	815-0813	Back Panel
22	699-8001	Rubber Coated Mouse Ball
23	661-0259	Apple II Mouse, Beige
	661-0400	AppleMouse, Platinum
24	865-0030	Handle
25	725-0014	Bottom Shield Insulator
26	612-5030	Apple IIc Bottom Case
27	865-0021	Foot
28	400-1612	Screw, 6-32 x 3/4
29	430-1020	Tap Screw, 4-24 x .750, PN CRS Rec. A
30	600-0349	Speaker
31	109-0648	Volume Control Knob
32	705-0040	Keyswitch, Low Profile (for original IIc keyboard)
	970-1262	Apple IIc Alps Keyswitch
33	865-0003	Rubber Foot
34	705-0041	On/Off Switch
35	661-71182	Apple IIc Power Supply (Internal)
36	705-0102	Keyswitch, Alternate
	970-1263	Alps Keyswitch, Locking
37	658-7055	Keycap Set, Beige (for original IIc keyboard)
	658-7083	Alps Keycap Set, Beige
	658-7096	Alps Keycap Set, Platinum
38	661-0294	Apple IIc Alps Keyboard, Beige
	661-0361	Apple IIc Alps Keyboard, Platinum
39	661-91177	Apple IIc Logic Board
	661-0359	Apple IIc Logic Board, Expandable
40	612-5004	RFI Shield Assembly, Power Supply
41	825-0907	Logo

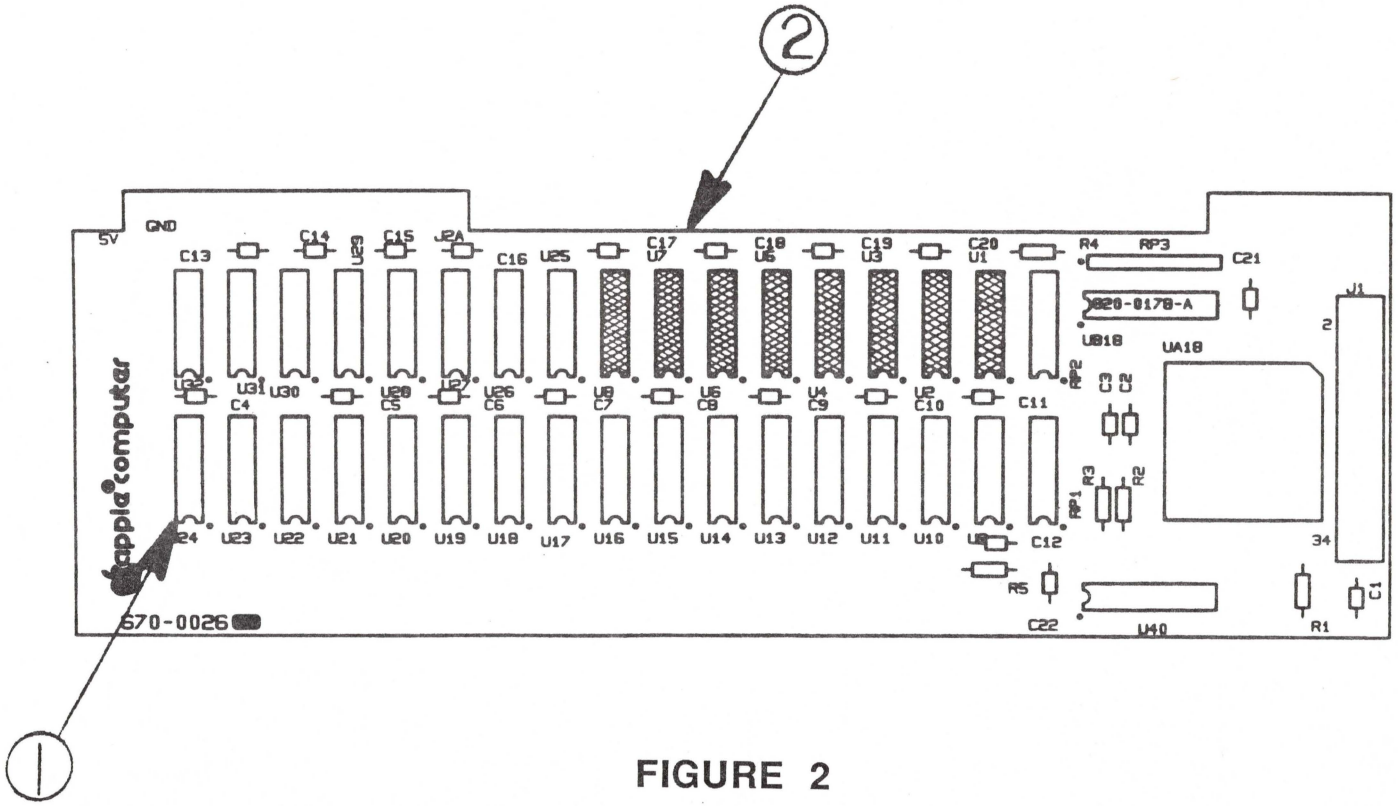
2
1
GND
5V
C13
C14
C15
J2A
C16
U25
C17
C18
C19
C20
R4
RP3
C21
820-0178-A
UB18
UA18
J1
2
34
C4
C5
C6
C7
C8
C9
C10
C11
C12
R5
C22
U40
R1
C1
R2
R3
RP1
RP2
670-0026

FIGURE 2

❑ APPLE IIc – MEMORY EXPANSION CARD (Figure 2)

Item	Part No.	Description
1	334-0021	IC, RAM, 256K
2	661-0360	Apple IIc Memory Expansion Card

Note: The eight ICs that are shadowed in Figure 2 are soldered to the Memory Expansion Card. The twenty-four sockets on the card can be filled with 256K RAM ICs for memory expansion.

End of Apple ii/c section
start of Apple iiGS section

Apple Technical Procedures

Apple IIGS

Table of Contents

Section 1 – Basics

1.2 Product Description
1.2 Apple II Compatibility
1.3 New Features
1.5 Connector Identification
1.5 Back Panel
1,5 Internal Connectors
1.6 Theory of Operation Overview
1.6 Introduction
1.6 Apple IIGS Logic Board
1.8 Power Supply
1.8 Apple DeskTop Keyboard and Mouse

Section 2 – Take-Apart

2.3 Electrostatic Discharge Prevention
2.3 What is ESD?
2.3 Rules to Follow
2.5 Top Cover
2.7 Power Supply
2.9 Case Hinge
2.11 Main Logic Board
2.13 Apple DeskTop Bus Keyboard

Section 3 – Diagnostics

3.2 Introduction
3.2 General Information
3.2 Before You Start
3.2 Built-In Diagnostics
3.3 Things to Remember
3.5 Apple II Diagnostic Diskette
3.5 Main Menu Selections
3.6 Choose Tests
3.9 Options
3.9 Special
3.10 Running the Diagnostics
3.13 Test Failures

Section 4 – Troubleshooting

4.2 Introduction
4.2 General Information
4.2 Before You Start
4.2 How to Use the Symptom Chart
4.3 Things to Remember
4.5 Apple IIGS Symptom Chart
4.5 Video Problems
4.5 Drive Problems
4.6 Peripheral Problems
4.7 Miscellaneous Problems

Section 5 – Additional Procedures

5.3 Battery Replacement
5.4 Apple IIGS Fan Kit
5.4 ProFile Interface Card Modification
5.6 Apple IIGS Memory Expansion Card
5.9 Apple IIGS Upgrade Kit for the Apple IIe
5.17 Apple IIe Extended Keyboard Modificaiton

Section 6 – Illustrated Parts List

6.3 Main Assembly (Figure 1)
6.5 Base Assembly (Figure 2)
6.7 Keyboard (Figure 3)
6.9 Mouse (Figure 4)
6.11 Cables (Figure 5)
6.13 Upgrade (Figure 6)

©Apple Computer, Inc., 1986, 1987. No portion of this document may be reproduced in any form without the written permission of Apple Computer, Inc.

Apple IIGS and DeskTop Bus are trademarks of Apple Computer, Inc. AppleTalk, UniDisk, Apple, and the Apple logo are registered trademarks of Apple Computer, Inc.

Apple Technical Procedures

Apple IIGS

Section 1 – Basics

❑ CONTENTS

1.2 Product Description
1.2 Apple II Compatibility
1.3 New Features
1.5 Connector Identification
1.5 Back Panel
1,5 Internal Connectors
1.6 Theory of Operation Overview
1.6 Introduction
1.6 Apple IIGS Logic Board
1.8 Power Supply
1.8 Apple DeskTop Keyboard and Mouse

❑ PRODUCT DESCRIPTION

The Apple IIGS™ is the newest and most powerful member of the Apple® II product line. The Apple IIGS incorporates many features of the Apple IIe and the Apple IIc, making it possible to run many of the existing programs. But it also contains many new advanced features, making it possible for future programs to be even more powerful.

Apple II Compatibility

The following features make the Apple IIGS compatible with older models of the Apple II:

- The 65C816 microprocessor, which can emulate a 6502 microprocessor.
- The ability to emulate the 128K memory configuration of the Apple IIc and IIe (with the Extended 80-column card installed) when running an Apple II program.
- AppleSoft BASIC in ROM, along with the Monitor and I/O routines.
- The built-in capability for 40- or 80-column text display like that on the Apple IIc.
- Two built-in serial ports for use with printers and modems as on the Apple IIc.
- One built-in drive port similar to the one on the Apple IIc.
- A game port for hand controllers and sketch pads like the one on the Apple IIc.
- Seven slots like those on the Apple IIe. These slots are almost identical to the Apple IIe slots and can accept most Apple II peripheral cards.

New Features

The following new features set the Apple IIGS apart from all earlier models of the Apple II.

- A 16-bit, 65C816 microprocessor. The 65C816 can run at 2.8 MHz or at 1 MHz: the speed is selectable by the user or the application.
- A minimum memory configuration of 256K.
- The Apple DeskTop Bus™, a simple I/O port that supports the detached keyboard and built-in mouse interface. This provides an inexpensive way to connect additional input devices.
- A built-in real-time clock, powered by a long-life battery.
- Built-in RGB and NTSC (composite) video outputs.
- The standard video modes include colored text (RGB only) and colored borders.
- Two super high resolution graphics display modes. Double Hi-Res is 320 x 200 pixels with sixteen colors. Super Hi-Res is 640 x 200 pixels with four colors.
- New sound-generating abilities from a special-purpose sound synthesizer IC that has fifteen independent voices.
- A built-in AppleTalk® interface.

Desk Accessories

The Control Panel is a resident utility program that can be accessed from the keyboard. The operating speed, video display modes, I/O port assignments, and slot allocations can all be changed from this utility.

Note: If the Control Panel is set incorrectly, it may appear that the system is having hardware problems.

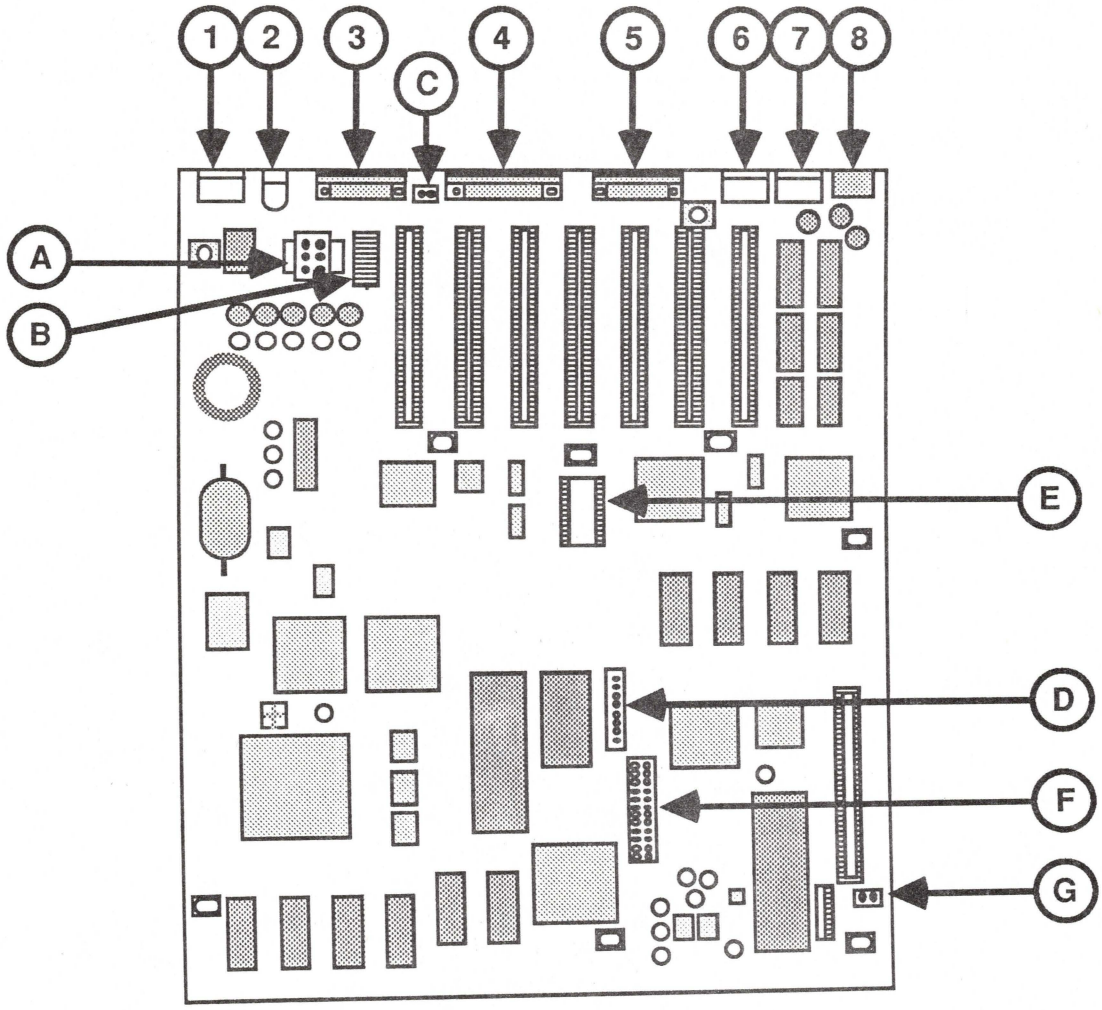

FIGURE 1

❑ CONNECTOR IDENTIFICATION

Back Panel

The back panel of the Apple IIGS has eight ports, which are listed below. The number beside the port name below corresponds to the numbered arrow in Figure 1.

1) Apple DeskTop Bus
2) Composite Video
3) RGB Video
4) Disk I/O
5) Game I/O
6) Serial 1
7) Serial 2
8) Earphone

Internal Connectors

There are seven connectors on the Apple IIGS logic board. Some of these connectors can only be found on an Apple Service exchange module or a retrofit board. In the list below, the letter beside the connector name corresponds to the lettered arrow in Figure 1.

A) Power Connector for the Apple IIe (retrofit only)
B) Power Connector for the Apple IIGS system
C) Fan Connector (Additional Kit)
D) Numeric Keypad Connector for the Apple IIe keypad (retrofit only)
E) Game I/O Connector
F) Keyboard Connector for the Apple IIe (retrofit only)
G) Speaker Connector

❑ THEORY OF OPERATION OVERVIEW

Introduction

The Apple IIGS is made up of three basic modules: the logic board, the power supply, and the Apple DeskTop Bus Keyboard. This section will give you the necessary information to perform logical troubleshooting on the Apple IIGS. The information here includes a description of each module and the various functions it performs.

Apple IIGS Logic Board

The logic board is the heart of the system. The CPU is the 65C816, a 16-bit CMOS microprocessor which is compatible with the 6502 and 65C02.

The Apple IIGS logic board is divided into two subsystems: the Mega II IC provides support for existing Apple II software; the Fast Processor Interface IC (FPI) provides the new functions for the Apple II family.

Mega II IC

The Mega II is a custom IC. It performs the functions of the following IIe components:

- MMU Custom IC (Memory Management Unit)
- IOU Custom IC (Input/Output Unit)
- Character Generator ROMs (8 languages)
- TMG IC (Timing Management Generator)
- GLU IC (General Logic Unit)

In addition, it provides:

- Support of additional RAM
- Video logic

The Mega II IC is a full-function Apple II, providing the traditional support of slots as well as the support of the built-in ports.

Fast Processor Interface IC

The FPI provides the following:

- Support of additional RAM
- I/O "shadowing" (This allows I/O reads to be done at full system speed.)

All communication with the outside world has to go through the Mega II IC. The system has to run at 1 MHz to remain compatible with all the existing interface cards and various peripherals.

The FPI is the processor controller and the memory controller for the fast half of the Apple IIGS. During normal operation, the FPI side of the system runs at 2.8 MHz and the Mega II side at 1 MHz.

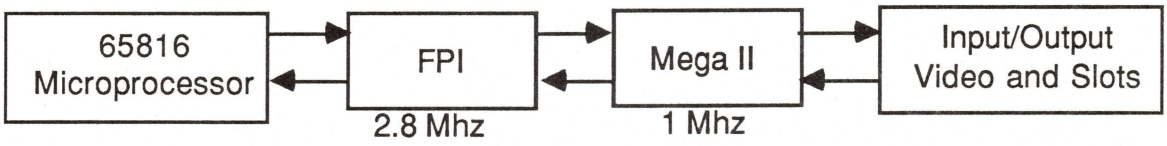

However, when it is necessary for the CPU to access an I/O port or a RAM location on the Mega II side of the system, the system is briefly slowed to 1 MHz and synchronized with the Mega II timing so that the access can be accomplished (see simplified diagram above). When the access is complete, the FPI side returns to the normal 2.8 MHz operating speed, and the Mega II continues at 1 MHz.

Video Graphics Controller

The Video Graphics Controller (VGC) is a custom IC that provides:

- Improved support of existing Apple II video
- New video display with borders
- New video modes
- An interface to the Real Time Clock chip
- Interrupt handling

Slotmaker

The Slotmaker is a custom IC that generates control signals for the Apple II family I/O bus. The Slotmaker decides which of more than two dozen select lines to enable by the information it receives from the Mega II.

Keyboard General Logic Unit

The Keyboard General Logic Unit (GLU) works in conjunction with the keyboard microcontroller to form an intelligent input device interface.

Sound General Logic Unit

The Sound General Logic Unit (GLU) serves as an interface between the sound chip, the reserved 64K by 8 dynamic RAM (used by the sound chip), and the Apple IIGS system.

Apple Desktop Bus

The Apple DeskTop Bus is a method and protocol for connecting input devices with computers. The Apple IIGS controls the flow of data to all connected devices by issuing various commands through the Apple DeskTop Bus. All devices connect with the Apple IIGS via a 3-wire shared bus that uses 4-pin mini DIN jacks at each device. A total of 16 devices can be connected to the bus.

IWM Disk Controller

The Apple IIGS uses 3.5-inch micro-floppy disk drives that utilize the Group Code Recording (GCR) disk format. The IWM, a self-contained disk controller card on one IC, simplifies the microprocessor's task of reading and writing data to and from the disk drives.

Memory Expansion Slot

The memory expansion slot allows you to add a memory card holding up to 4 megabytes of RAM or 896K bytes of ROM memory. This slot supports memory only.

Power Supply

The power supply operates on standard line voltage and outputs various DC voltages, which are used by the logic board and by some peripheral devices (such as UniDisk™ and UniDisk 3.5).

Apple DeskTop Keyboard and Mouse

The keyboard connects to the Apple DeskTop Bus port on the rear of the Apple IIGS. The keyboard has its own microprocessor, which is called the Keyboard Microcontroller.

All devices that are made for the Apple DeskTop Bus have some kind of microprocessor that makes them intelligent devices. All except the mouse have ports for connecting other devices. The mouse must be the last device attached to the Apple DeskTop Bus because it has no port.

Apple Technical Procedures

Apple IIGS

Section 2 – Take-Apart

❑ CONTENTS

2.3 Electrostatic Discharge Prevention
2.3 What is ESD?
2.3 Rules to Follow
2.5 Top Cover
2.7 Power Supply
2.9 Case Hinge
2.11 Main Logic Board
2.13 Apple DeskTop Bus Keyboard

Note: The underlined steps in the following section refers to the take-apart for that particular module.

WARNING: *Be sure the power has been disconnected before attempting any of these procedures.*

❑ ELECTROSTATIC DISCHARGE PREVENTION

What Is ESD?

ESD (Electrostatic Discharge) can cause severe damage to sensitive micro-circuits. Just touching a chip or brushing it with a nylon sleeve can degrade a circuit so that it never performs again to specifications. Some microcircuits are sensitive to as little as 500 volts, or about one-sixth as much static electricity as you can feel.

Rules To Follow

Certain preventive measures must be taken to avoid ESD damage. When you are unwrapping, installing, or replacing any microcircuits, observe the following precautions:

- **Before handling boards or ROMs, ground yourself!** Wear a grounding wriststrap and attach it to your workbench pad. The pad must then be grounded to a workbench that is grounded to the building's ground.
- **Ground the chassis to the same potential you hold.** Place the unplugged Apple IIGS chassis assembly on the grounded workbench pad and connect the chassis to the workbench pad via an alligator clip.
- **Use antistatic bags for carrying boards and ROMs.** Whenever ROMs or boards are to be stored or moved anywhere, first put them in antistatic bags. Be sure to touch the bags before touching the ROMs or boards.
- **Handle ROMs by the body, not the leads.** You may safely touch the leads only if you are grounded.
- **Do not wear polyester clothing or bring plastic, vinyl, or styrofoam into the area.** The static field around these materials cannot be removed.
- **Do not place board or ROMs on any metal.** Place them on the grounded workbench pad or on antistatic or nonconductive foam.

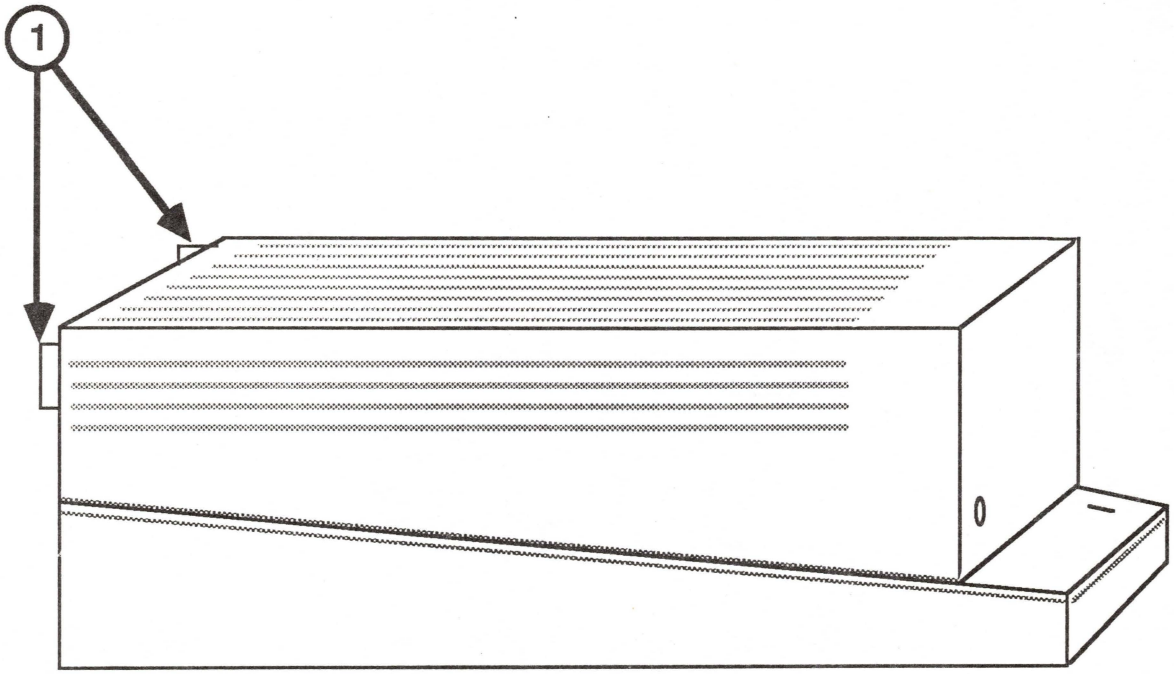

FIGURE 1

❑ TOP COVER

Materials Required (None)

Remove

1. Disconnect the keyboard.
2. Place the machine with the front facing you.
3. Locate the tabs on the back of the machine (Figure 1, #1), one on each side. Push the tabs in with your index fingers and lift the top cover, back first, from the machine. No force is necessary. (Do not push down on the top of the machine with your thumbs.)

Replace

1. Position the top cover, front first. Align the bottom front edge with the plastic tabs on the front of the machine.
2. Lower the top cover until the rear tabs snap into position.
3. Connect the keyboard.

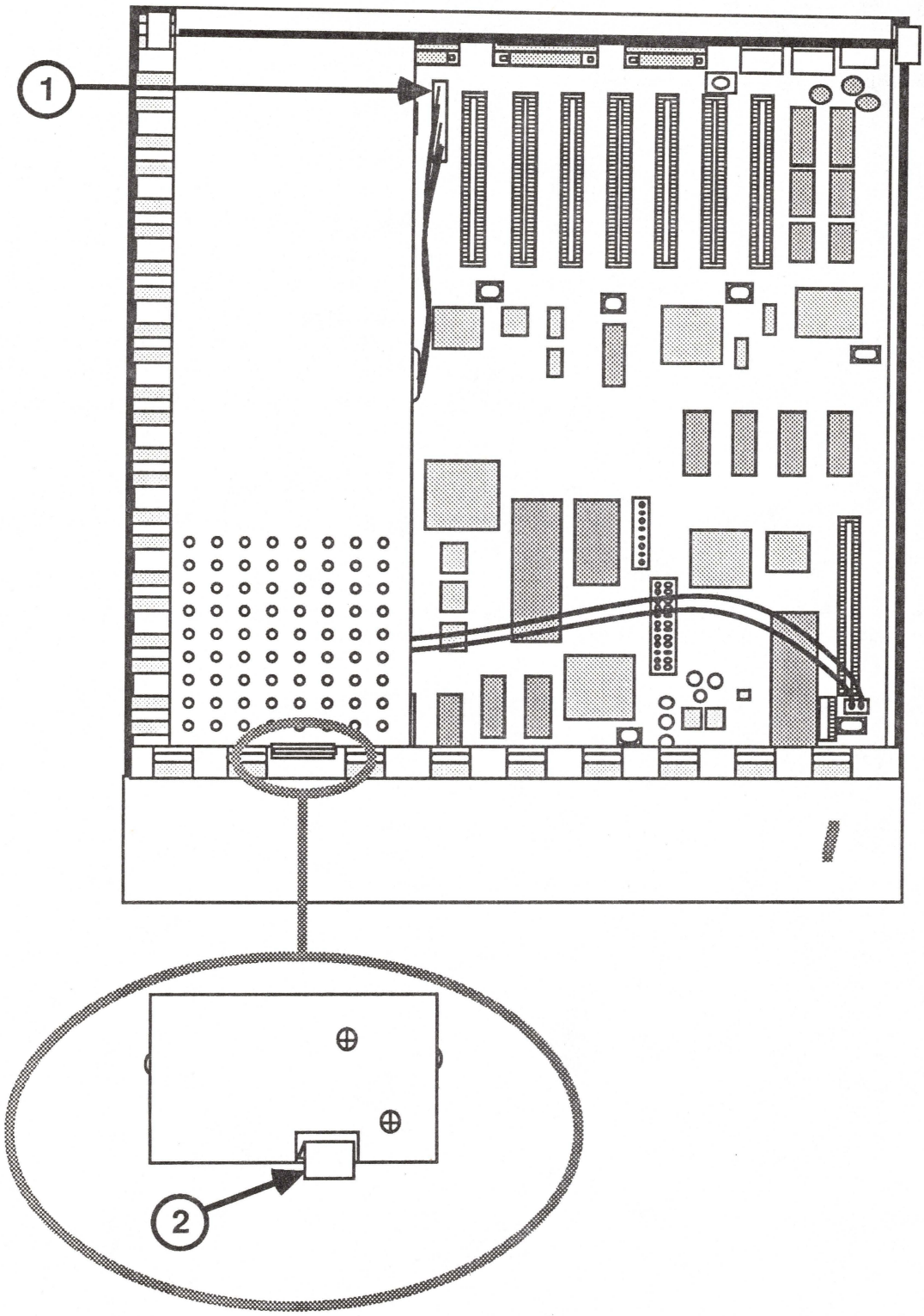

FIGURE 2

❑ POWER SUPPLY

Materials Required (None)

Remove

1. Remove the top cover.
2. Locate and disconnect the power supply cable (see Figure 2, #1).
3. Locate the tab that holds the power supply in place (see Figure 2, #2).
4. Gently pull back the tab, lift the power supply up and slide it towards you off the tabs on the back of the case.
5. Lift the power supply from the case.

Replace

1. Position the power supply so that the three tabs on the back of the case slide into the power supply.
2. Lower the power supply into position so that the tab in the front clicks into place (see Figure 2, #2).
3. Reconnect the power supply cable (see Figure 2, #1).
4. Replace the top cover.

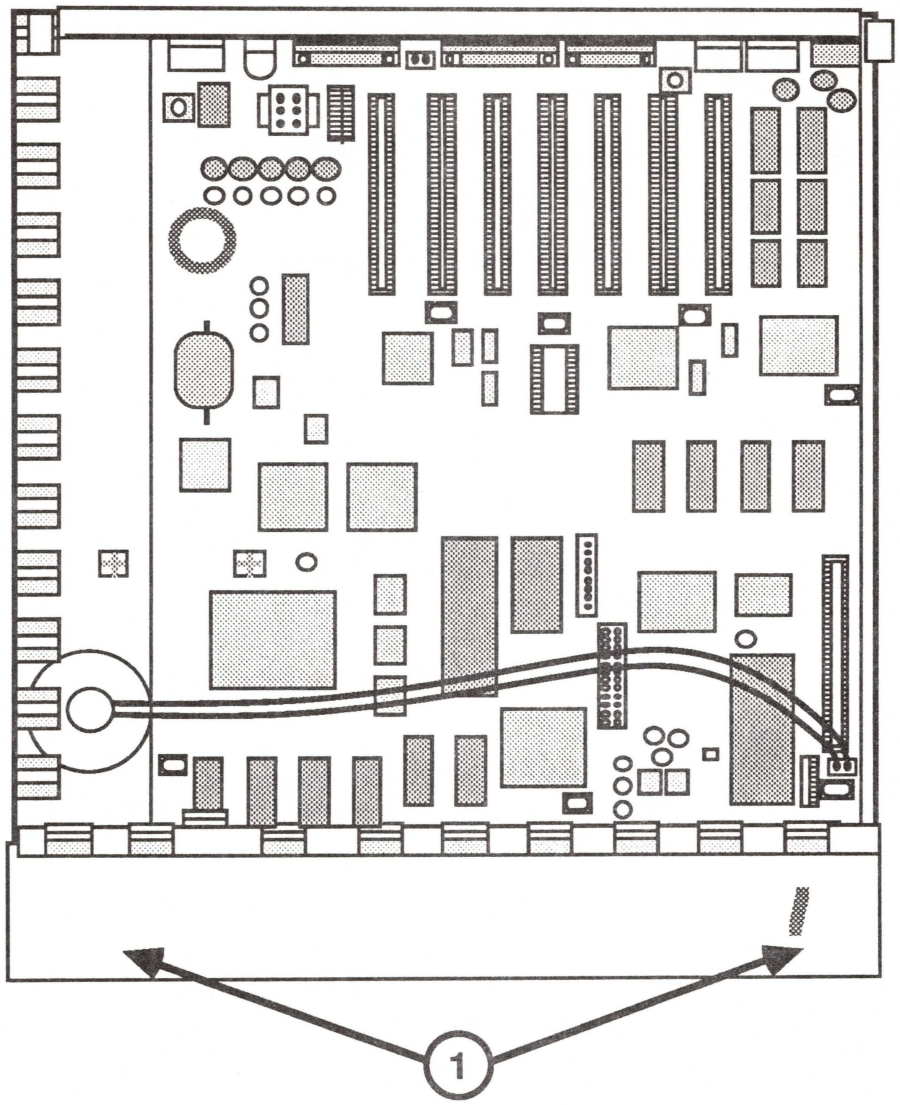

FIGURE 3

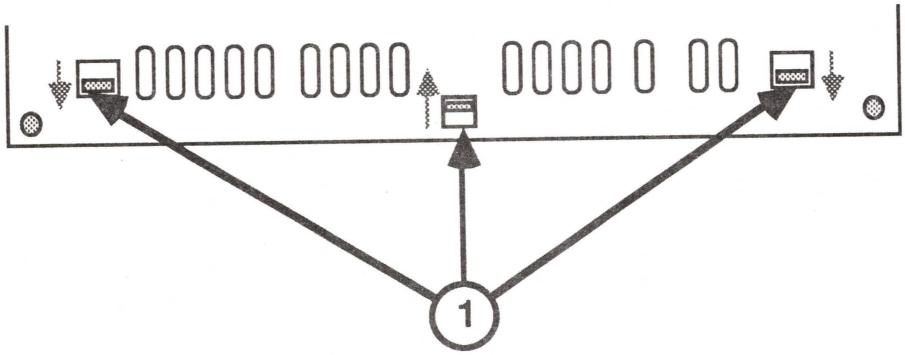

FIGURE 4

❑ THE CASE HINGE

Materials Required

Jeweler's screwdriver

Remove

1. Remove the top cover.
2. Remove the power supply.
3. Locate the case hinge (see Figure 3, #1).
4. Turn the machine over and remove the case hinge by inserting your finger or a small (jeweler's) screwdriver into each tab, one at a time (see Figure 4, #1). The case hinge will pop free when each tab is released.
5. Remove the case hinge.

Replace

1. Position the case hinge so that the tabs line up with the holes in the bottom case (see Figure 4, #1).
2. Gently pop the case hinge into place.
3. Replace the power supply.
4. Replace the top cover.

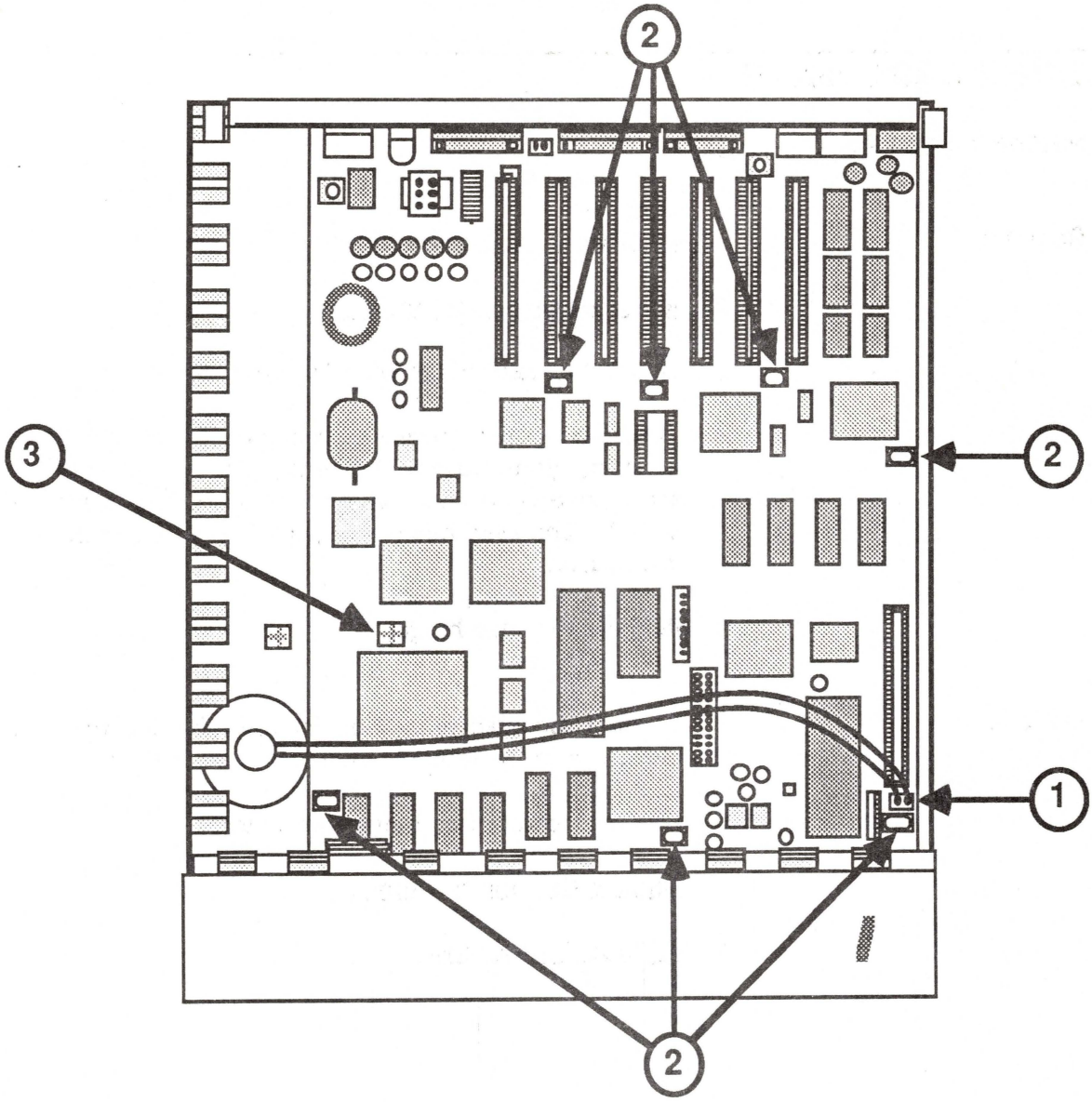

FIGURE 5

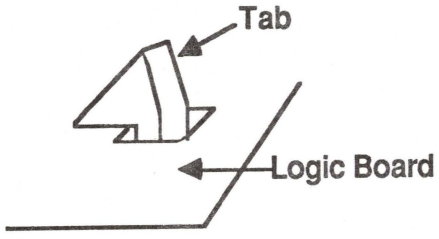

FIGURE 5a

❑ MAIN LOGIC BOARD

Materials Required

Small pair of needlenose pliers

Remove

1. Remove the top cover.
2. Remove the power supply.
3. Remove the case hinge.
4. If a metal EMI Fence (shield) is installed on the rear of the board, remove it.
5. Disconnect the speaker wire (see Figure 5, #1).
6. Locate the seven tabs which hold the logic board in position (see Figure 5, #2).

***CAUTION:** Use a minimum amount of flexing when removing the board. An excessive amount of flex and force may damage the board.*

7. Starting at the front of the board, squeeze each tab (see Figure 5a) one at a time, gently lifting the board up as you proceed to the rear of the board. Be sure all seven tabs have been released (see Figure 5, #2).
8. Lift the board towards you and remove it from the case.

Replace

1. Line up the connectors on the rear of the logic board with the openings on the rear of the case. Be sure to position the board so that the large mounting tab slips into position (see Figure 5, #3).
2. Gently press the board onto the seven tabs (see Figure 5, #2).
3. Connect the speaker wire (see Figure 5, #1).
4. If you removed an EMI Fence, put it back.

...Continued on next page

5. Replace the case hinge.

6. Replace the power supply.

7. Replace the top cover.

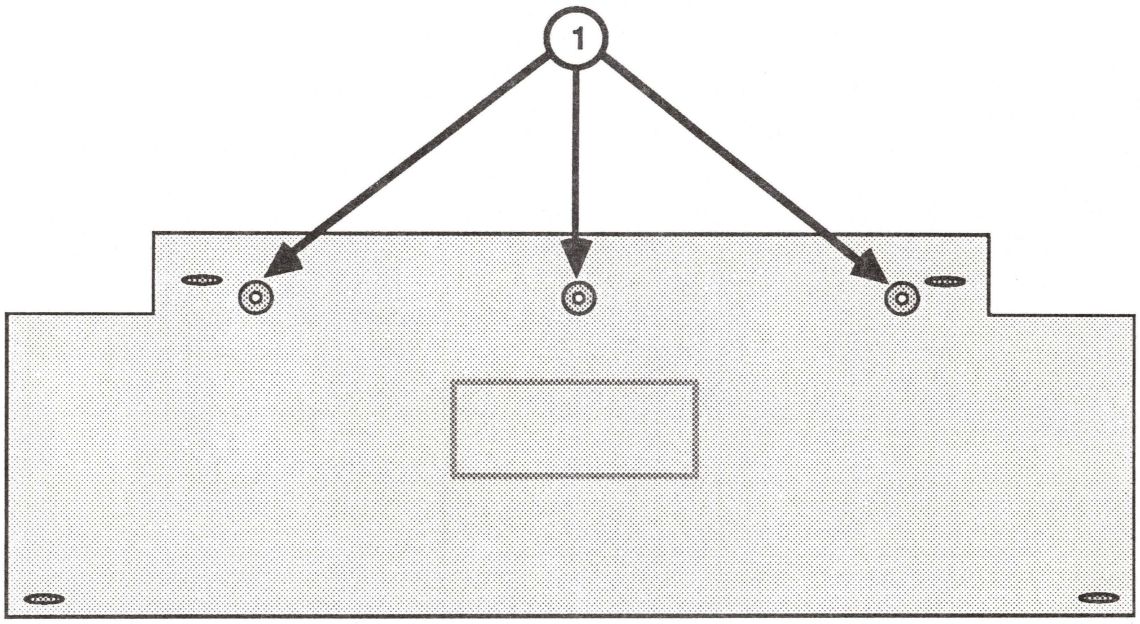

FIGURE 6

❑ APPLE DESKTOP BUS KEYBOARD

Exchanging the Keyboard

If you are exchanging the entire ADB Keyboard, **do not** remove the keyboard mechanism. Send the entire unit (**without** the cable) in for exchange. This procedure is to be used for replacing keyswitches only.

Materials Required

Medium Phillips screwdriver

Remove

1. Disconnect the keyboard from the Apple Desktop Bus port.
2. Remove the three screws from the back of the keyboard (see Figure 6, #1). Remove the small rectangular piece from the front of the keyboard.
3. Lift the mechanical assembly out of the bottom case.
4. Use the replacement procedures for Apple IIc keyswitches in *You Oughta Know.*

Replace

1. Set the mechanical assembly back into the bottom case.
2. Position the rectangular piece onto the front of the keyboard.
3. Hold the rectangular plastic piece in place, turn the keyboard over, and install the three screws (see Figure 6, #1).

Apple Technical Procedures

Apple IIGS

Section 3 – Diagnostics

❑ CONTENTS

3.2 Introduction
3.2 General Information
3.2 Before You Start
3.2 Built-In Diagnostics
3.3 Things to Remember
3.5 Apple II Diagnostic Diskette
3.5 Main Menu Selections
3.6 Choose Tests
3.9 Options
3.9 Special
3.10 Running the Diagnostics
3.13 Test Failures

❑ INTRODUCTION

General Information

This section describes general procedures for using the 3.5- or the 5.25-inch Apple II Diagnostic Diskette on the Apple IIGS. This diagnostic allows you to select the tests you wish to run and the order in which you wish to run them. It also allows you to run a continuous test and keep a record of any failed tests which may occur. This will prove valuable for pinpointing problems that cause intermittent failures.

Before You Start

Read the section entitled *Things to Remember* before you run the diagnostics. It will give you specific hints for using the diagnostic.

Built-In Diagnostics

Before attempting to boot the diskette-based diagnostics, run the built-in diagnostics. To run them, hold down the <Open-Apple> and <Option> keys while turning on the power. (To run them if the power is on, hold down <Control>, <Open-Apple>, <Option>, and <Reset>. Release <Reset> first, then the other keys.)

The screen will display various patterns and solid colors, with a code displayed in the lower left hand corner, for approximately one minute. The RAM, ROM and other components on the logic board are being tested.

Results

The results are displayed in the lower left hand corner of the screen. "System Good" is accompanied by a high-toned beep, "System Bad" by a low-toned beep.

System Good

If you can access the built-in diagnostics and you receive the message "System Good," connect a disk drive and continue with this section.

System Bad

If you cannot access the built-in diagnostics or you receive the message "System Bad," exchange the keyboard or logic board and try again.

❑ THINGS TO REMEMBER

Backup Information

1. Make a backup diskette before beginning! When testing a defective Apple IIGS it is possible to erase and/or damage a section of the diskette.

   The *System Utilities* diskette (Rev. 2.1.1 or higher) is used for making a backup copy. Follow the instructions in the *System Utilities Manual*.

Diagnostic Information

2. If you are going to select the **Serial External Test**, the loopback cable must be installed.

3. To access the Help screen, hold down <Open-Apple> and <Shift> and press ?.

4. Before booting the diagnostic, enter the Control Panel (refer to Section 4, Troubleshooting). Verify that the keyboard type-ahead buffer is disabled. Verify that the language is set and the correct keyboard layout is selected for the keyboard that is connected. Verify that Slot 4 is set for the *Mouse Port* and that Slot 7 is set for *Your Card*. Then turn off the Apple IIGS, insert the *Apple II Diagnostic Diskette*, and reboot. If you do not use this method, the diagnostic may lock up or give false results.

5. When loading or saving selected test sequences to diskette, use only a known-good system and disk drive.

6. If you select the looping function and have selected a test which needs a loopback cable or card (Serial External Test, External Memory Card RAM Test) and the item is not installed, you will receive an error code.

Diagnostic Commands

7. Where input is required to start the next test (after video tests, for example), press the <Spacebar>. If you press <Escape>, the testing will stop.

8. To abort the keyboard test, hold down <Control> and press C.

Choose Tests

9. To make a selection, type the letter of the test or use the arrow keys until the selection is highlighted, and then press <Return>.

10. When chosen, the tests display a number (1, 2, 3, etc). This indicates the order in which the tests will be performed.

11. To deselect a test, type the letter of the test or use the arrow keys until the selection is highlighted; then press the <Delete> key. The numbers displayed will be corrected automatically. To deselect all tests, hold down <Open-Apple> and press <Delete>.

❑ APPLE II DIAGNOSTIC DISKETTE

Materials Required

Apple II Diagnostic Diskette
Loopback cable (optional)
Apple IIGS Memory Expansion Card (optional)
Known-good UniDisk 3.5 or 5.25
Apple IIGS or an Apple IIe which has the retrofit kit installed

Main Menu Selections

The *Apple II Diagnostic Diskette* main menu is shown below.

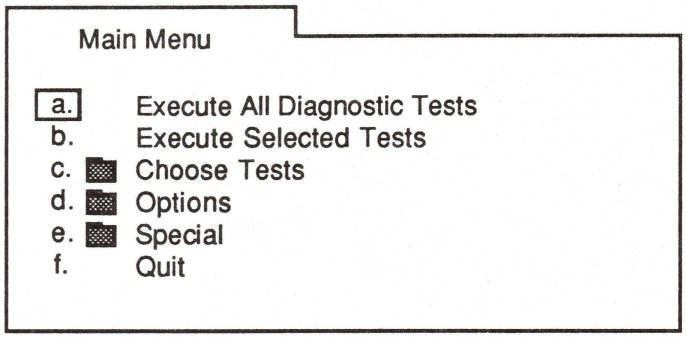

The following list describes each item in the main menu.

Execute All Diagnostic Tests – Runs the standard Apple IIGS test sequence.

Execute Selected Tests – Allows you to run only the tests selected in the **Choose Tests** folder.

Choose Tests – Contains all the tests that can be selected for the Apple IIGS.

Options – Contains various selections which allow you to control how the tests are run.

Special – Contains various options for keeping track of errors generated, for saving a test sequence, and for loading a test sequence from diskette.

Quit – Stops all testing reboots the system.

Choose Tests

The **Choose Tests** folder is shown below.

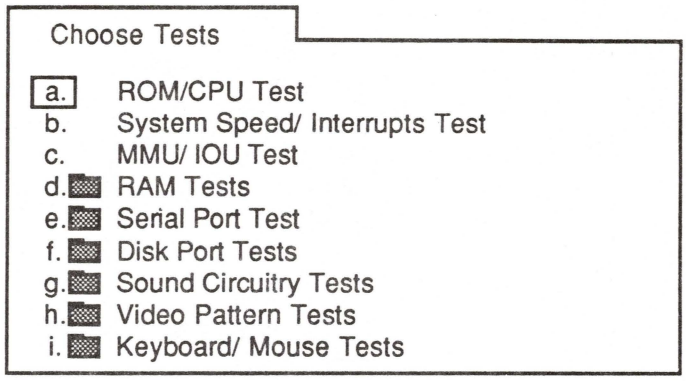

The following list describes the items in the **Choose Tests** folder.

ROM/CPU Test – Checks the ROM and CPU.

System Speed/Interrupts – Checks that the interrupts and both speeds (1Mhz and 2.8 MHz) are functioning correctly.

MMU/IOU Test – Checks the Memory Management Unit and the Input/Output Unit.

RAM Tests Folder

RAM Tests – This folder contains the following:

- Main Logic Board RAM Test – Checks the 256K on the logic board.
- External Memory Card RAM Test – Checks the RAM on an Apple IIGS Memory Expansion Card (if installed). This test will not run unless selected. Refer to Section 5, Additional Procedures, for more information.
- Clock RAM Test – Checks the RAM that is used for the clock and the clock time keeping function.

Serial Ports Folder

Serial Ports – This folder contains the following:

- Serial Internal Test – Checks the logic board circuitry that handles the serial ports.
- Serial External Test (Loopback is required) – Checks the ports to be sure they are sending and receiving data correctly.

Disk Port Folder

Disk Port – This folder contains the following:

- Disk Port Test – Checks the drive circuitry on the logic board for all 3.5- or 5.25-inch drives that are attached to the system. The diskette in the drive must be formatted with ProDOS in order to be tested.

Sound Tests Folder

Sound Tests – This folder contains the following:

- Sound Circuitry Test – Checks the specialized sound components and the sound RAM on the logic board.
- Speaker Tone Test – Checks the speaker by playing a sequence of beeps.

Video Pattern Tests Folder

Video Pattern Tests – This folder contains the following:

- Color Bar Test – Displays vertical color bars with the name of each color below.
- Character Generator Test – Displays the Swedish, German, Italian, Spanish, Danish, French, British, Domestic, and Domestic2 character sets.
- 80/40 Column Text Test – Displays a few lines of 80 and 40 column characters.
- Low Resolution Graphics Test – Displays both pages (one and two) of the low resolution graphics mode with bars at the top of the screen.

- High Resolution Graphics Test – Displays both pages (one and two) of a grid of 9 vertical lines intersected by 8 horizontal lines.

- Double High Resolution Graphics Test – Displays a grid of 18 vertical lines intersected by 8 horizontal lines.

- Super High Resolution Graphics Test – The first screen displays a grid of 11 vertical lines intersected by 21 horizontal lines, the second screen displays 6 vertical color bars, and the third screen displays a solid blue screen.

- Border Color Test – Displays the 16 possible border colors.

Keyboard and Mouse Tests Folder

Keyboard/Mouse Tests – This folder contains the following:

- ADB Domestic Keyboard – Displays a keyboard layout for the Apple Desktop Bus Keyboard which is used on the Apple IIGS. The instructions are given at the bottom of the screen.

- Standard IIe Keyboard Test – Displays a keyboard layout for the standard Apple IIe keyboard. The instructions are given at the bottom of the screen.

- Extended IIe Keyboard Test – Displays a keyboard layout for the Apple IIe Extended Keyboard (with built-in keypad). The instructions are given at the bottom of the screen.

- Languages – Displays a list of languages available for the keyboard tests. The default setting is U.S.A. English. The language selected here must match the one in the Control Panel setting.

- ADB Mouse Test – Displays a pointer which can be moved around the screen and which indicates whether the mouse button is pressed or not.

- Joystick/Paddle Test – Displays a pointer which can be moved around the screen and which indicates whether the joystick/paddle buttons are pressed or not. If you are testing paddles, verify that both reach the full range possible (0-FF).

Options

When the **Options** folder is open, the following list of selections appears on the screen.

- Loop Tests Until Esc is Pressed
- Continue On Error Until Esc

If an option is selected, a check mark appears beside the item. To deselect an option, just select the same option again.

Special

The following selections appear when the **Special** folder is opened.

- Display Error Log – Displays the names of the tests that failed since the last clearing of the error log (up to 255 names).
- Clear Error Log – Erases the log from RAM.
- Clear Testing Status Line – Clears the iterations and failure counts displayed.
- Display Current System Status – This indicates the type of system, the ROM version, the amount of memory available (number of banks), and the memory card status.
- Load Selected Test Sequence from Disk – This will load a previously saved test sequence. The sequence can then be executed.
- Save Selected Test Sequence to Disk – This will save a test sequence you have selected to the test diskette.

When any of the above items is selected and <Return> is pressed, the action is performed.

Running the Diagnostics

The diagnostic program can be configured in various ways. All the tests can be run in their automatic sequence, or selected tests can be looped or run in an order you specify.

The diagnostic also has the ability to execute a test selection sequence that has been saved to the test diskette. Saved test sequences make it easier to test Apple IIGS Upgrade systems and other specially configured systems that require non-standard tests (see "Customized Tests").

> ***Note:*** Before booting the diagnostic, enter the Control Panel (refer to Section 4, Troubleshooting). Verify that the keyboard type-ahead buffer is disabled. Verify that the language is set and the correct keyboard layout is selected for the keyboard that is connected. Verify that Slot 4 is set for the *Mouse Port* and that Slot 7 is set for *Your Card.* Then turn off the Apple IIGS and reboot it with the diagnostic; otherwise the diagnostic may lock up or give false results.

Standard Test

1. Install the appropriate loopback connector and the memory card, if available.

   If they are not available, type N when the diagnostic asks you if they are installed. The testing will continue.

2. Insert the *Apple II Diagnostic Diskette* and power on the system.

3. Type the letter a or use the arrows to select **Execute All Diagnostic Tests**, and press <Return>.

   To continue after certain tests (for instance, speaker, video patterns), press the <Spacebar>.

   If an error is encountered, the testing will stop and an alert box will appear specifying which test failed. Refer to "Test Failures" at the end of this section for the appropriate actions to perform.

4. On completion, the message **Testing finished** will be displayed in the alert box.

Customized Test

1. If you are going to test the Serial ports and the Memory card, install these items now.

2. Insert the *Apple II Diagnostic Diskette* and power on the system.

3. Type the letter c or use the arrows to select **Choose Tests**, and press <Return>.

4. From this menu, select the first three tests (if desired) and press <Return> to select them.

   Select the other test folders and press <Return> to display them. Select the tests you wish to run from each folder and press <Return> to select them.

   If you wish to deselect a test, use the letters or arrows to select the test and press the <Delete> key.

Saving and Loading Test Sequences

5. To save your customized test sequence, return to the main menu, and select **Special**. Select **Save Selected Test Sequence to Disk** and press <Return>.

   You now have the selected test sequence saved to diskette. The sequence may be loaded using **Load Selected Test Sequence From Disk** at a later date when it is needed.

6. On completion, return to the main menu, select **Execute Selected Tests,** and press <Return>.

   To continue after certain tests (for instance, speaker, video patterns), press the spacebar.

   If an error is encountered, the testing will stop and an alert box will appear specifying which test failed.

7. On completion, the message **Testing Finished** will be displayed in the alert box.

Continuous Test

A continuous (looping) test is possible with all tests. Select the tests you wish to loop by following the instructions under "Customized Test" (see above). Follow the steps below to run a continuous test.

1. After you have chosen the tests you want to run, return to the main menu, select **Options**, and press <Return>.

2. From the menu select **Loop Tests Until Esc is Pressed** and press <Return>.

   A check mark should appear, indicating that it has been selected.

3. Select **Continue On Error Until Esc** if you want to continue looping regardless of the error until <Escape> is pressed.

   If you do not select this option, the testing will halt when an error is encountered.

   Errors will be logged to RAM.

4. Return to the main menu, select **Execute Selected Tests**, and press <Return>.

   The tests will run (depending on your selection in step 3) continuously until an error occurs or <Escape> is pressed. If <Escape> is pressed, the looping is canceled.

   If you press <Escape> to stop the testing, you can then check for errors by selecting **Special** and pressing <Return>, then select **Display Error Log**.

5. If you are going to run the test again, be sure to clear the error log and the status line to reselect **Loop Tests Until Esc is Pressed** before returning to the main menu.

Test Failures

When a test fails, the following type of message will be displayed:

> Report the following information on the repair form:
>
> ROM/CPU Test Failed
>
> Refer to the Apple Service Technical Procedures

The following is a list of the tests along with the recommended remedial actions.

Tests	Remedial Action
• *ROM/CPU*	– Exchange logic board.
• *System Speed/ Interrupts*	– Exchange logic board.
• *MMU/IOU*	– Exchange logic board.
• *Main Logic Board RAM*	– Exchange logic board.
• *Memory Expansion Card*	– Refer to Section 5, Additional Procedures.
• *Clock RAM*	– Exchange logic board.
• *Serial Internal*	– Exchange logic board.
• *Serial External*	1. Exchange loopback cable. 2. Exchange logic board.

Tests	Remedial Action
• *Disk Port*	1. Exchange drive. 2. Exchange logic board.
• *Sound Circuitry*	1. Exchange logic board. 2. Exchange speaker.
• *Speaker*	1. Exchange speaker. 2. Exchange logic board.
• *All Video*	1. Exchange logic board.
• *ADB Domestic Keyboard*	1. Exchange cable. 2. Exchange keyboard. 3. Exchange logicboard.
• *Standard IIe Keyboard*	1. Exchange cable. 2. Exchange keyboard. 3. Exchange logic board.
• *Extended IIe Keyboard*	1. Exchange cable. 2. Exchange keyboard. 3. Exchange logic board.
• *ADB Mouse*	1. Exchange mouse. 2. Exchange cable for keyboard. 3. Exchange keyboard. 4. Exchange logic board.
• *Joystick/Paddle*	1. Exchange joystick/paddle. 2. Exchange logic board.

Apple Technical Procedures

Apple IIGS

Section 4 – Troubleshooting

❑ CONTENTS

4.2 Introduction
4.2 General Information
4.2 Before You Start
4.2 How to Use the Symptom Chart
4.3 Things to Remember
4.5 Apple IIGS Symptom Chart
4.5 Video Problems
4.5 Drive Problems
4.6 Peripheral Problems
4.7 Miscellaneous Problems

❑ INTRODUCTION

General Information

This troubleshooting section can be used if the diagnostics are unable to detect a module failure or if the diagnostic diskette cannot be booted. After repairing the system, the diagnostic should be run to verify system operation.

Before You Start

Read the section entitled "Things to Remember" before you begin troubleshooting. There are numerous things you need to know about the Apple IIGS in order to troubleshoot the system effectively.

How to Use the Symptom Chart

The symptom chart has two columns. The left hand column lists the problem of the defective system, the right hand column lists corrective actions. For each symptom, perform the corrective action(s) in the order listed. If a corrective action does not fix the problem, proceed to the next step.

If a board is replaced but does not fix the problem, the original board should be reinstalled before you perform the next step.

❑ THINGS TO REMEMBER

Safety Information

1. Follow the basic ESD precautions when troubleshooting. (Refer to Section 2, Take-Apart, for more information.)

2. Be sure the power is off before installing any interface cards, connecting any peripherals to the ports on the rear of the system, **or** connecting the keyboard to the Apple DeskTop Bus.

Control Panel Information

3. The Apple IIGS is configured by accessing the *Control Panel.* The Control Panel allows you to change the video display modes, the sound, the system speed, the clock, the language, the slots, port 1 and port 2, and the RAMdisk. (Refer to the *Apple IIGS Owner's Manual* for more detailed information.)

4. To gain access to the Control Panel on an Apple IIGS, hold down the <Option> key as you turn the system on. A menu with four possible selections will appear. Select number 1 and press <Return>. This will bring you to the Desk Accessories window.

   To gain access to the Control Panel on an upgraded Apple IIe, hold down the <Control>,<Closed-Apple>, and <Reset> keys as you power on the system. Release the <Reset> key. When the Control Panel appears, release the other keys.

5. On an upgraded Apple IIe, use the <Closed-Apple> key where Apple IIGS instructions ask for the <Option> key.

Port and Slot Configuration

6. The printer port is configured to work automatically with the ImageWriter series of printers. There are two ways to set the port configuration: from an application program or from the Control Panel.

7. The Memory Expansion slot is designed only for the Apple IIGS Memory Expansion Card. **Do not** insert any other card into this slot unless the manufacturer specifies to do so.

8. Each port on the Apple IIGS is designed to impersonate an Apple II slot containing a card.

Device	Connected To	Looks like
Printer	Port 1	Slot 1
Modem	Port 2	Slot 2
Drives		
3.5	Disk Drive Port	Slot 5
5.25	Disk Drive Port	Slot 6
AppleTalk	Port 1 or 2	Slot 7
Mouse	Mouse Port Keyboard	Slot 4

Because each port impersonates a slot, you can't have both the port and the corresponding slot active at the same time. You activate one or the other by using the Control Panel. When a slot is activated, the words **Your Card** replace the words describing the port.

9. The configuration of ports and/or slots which is specified within an application overrides the Control Panel setting.

❑ APPLE IIGS SYMPTOM CHART

Video Problems

- *Display is fuzzy on a known-good Monitor*
  1. Verify Control Panel setting for video.
  2. Verify that the software supports the monitor (RGB, etc.).
  3. Exchange logic board.

- *Garbage displayed on known-good monitor; no beep*
  1. Exchange logic board.
  2. Exchange power supply.

- *No video, no beep; power light on*
  1. Exchange logic board.
  2. Exchange power supply.

Drive Problems

- *Won't boot from known-good disk drive*
  1. Verify Control Panel setting for correct slot assignment.
  2. Exchange software.
  3. Exchange logic board.

- *Drive does not turn on*
  1. Verify Control Panel setting for correct slot assignment.
  2. Exchange logic board.

Peripheral Problems

- *No keyboard output or wrong output is displayed*
  1. Verify Control Panel setting for correct language selection.
  2. Exchange Apple DeskTop Bus cable.
  3. Exchange keyboard.
  4. Exchange logic board.

- *No output from specific keyswitch(es)*
  1. Exchange keyboard or keyswitches.
  2. Exchange logic board.

- *No audio*
  1. Verify Control Panel setting for sound.
  2. Exchange logic board.
  3. Exchange speaker.

- *Problems transmitting and receiving data with a known-good modem*
  1. If a port is being used, verify that modem DIP switch settings match the settings in the Control Panel.

     OR

     If a slot is being used, verify that modem DIP switch settings match the settings on the interface card and that the correct slot is selected in the Control Panel.
  2. Exchange logic board.

- *Won't print to a known-good printer*
  1. If a port is being used, verify that printer DIP switch settings match the settings in the Control Panel.

     OR

     If a slot is being used, verify that printer DIP switch settings match the settings on the interface card and that the correct slot is selected in the Control Panel.
  2. Exchange logic board.

- *Cannot read or write to ProFile*
  - Add a jumper to the interface card (refer to Section 5, Additional Procedures).

- *Unidentifiable system crashes when accessing the Hard Disk 20SC*
  - Check the ROM version on the interface card (refer to Hard Disk 20SC, Appendix A).

Miscellaneous Problems

- *No power light, no video*

  1. Exchange AC power cord.
  2. Exchange power supply.
  3. Exchange logic board.

- *Programs run erratically and often crash*

  1. Verify Control Panel setting for speed (normal or fast). Different software will require different settings.
  2. Exchange logic board.

Apple Technical Procedures

Apple IIGS

Section 5 – Additional Procedures

❑ CONTENTS

5.3 Battery Replacement
5.4 Apple IIGS Fan Kit
5.4 ProFile Interface Card Modification
5.6 Apple IIGS Memory Expansion Card
5.9 Apple IIGS Upgrade Kit for the Apple IIe
5.17 Apple IIe Extended Keyboard Modification

❑ BATTERY REPLACEMENT

Introduction

Lithium thionyl chloride batteries, the type used in the Apple IIGS, have a potential for explosion if improperly handled. The following precautions should be taken when storing, handling, and disposing of lithium batteries.

- Lithium batteries should be stored in a designated, well-marked area with limited access.
- Apple's lithium batteries are sealed in individual zip-lock wrappers. Upon receipt, the batteries should be inspected for integrity of their wrappers and should be stored in the same packaging in which they were received.
- Lithium batteries cannot be recharged and therefore will require disposal when "dead." In addition to its explosive potential, lithium is water-reactive, **and must be disposed of as a hazardous waste.** Therefore, Apple recommends the following course of action:

Battery Disposal

After removing a "dead" battery from a board, clip off the lead wires and place the battery into the zip-lock wrapper and original packaging from which the replacement battery was taken. Mark the battery *DEAD* and return it to Apple, where it will be disposed of following EPA guidelines.

The Apple IIGS contains a single long-life lithium battery that should serve for the life of the product in most cases. However, if a battery should fail, replace it according to the following procedure.

Materials Required

Soldering iron (60 watt, 700 degrees)
Solder sucker
60/40 resin core solder
Small wire cutters

Remove

1. Remove the Apple IIGS logic board from the case. Refer to Section 2, Take-Apart, if necessary.

2. Locate the battery on the front of the logic board (see Figure 1, #1). Turn the logic board over. The battery is held in place by two soldered leads. Apply fresh solder to the two connections.

3. Desolder the two connections.

WARNING: *Do not force the connections free. Force can remove the traces on the board. Repeat step 3.*

4. Remove the battery and return it to Apple.

Replace

1. Insert the new battery so that it is flush with the board. Be sure the positive side of the battery is in the correct location (see Figure 1, #1).

2. Solder the battery into place and then clip the excess ends from the back of the board. A length of about 1/16 inch is sufficient.

3. Replace the logic board. Refer to Section 2, Take-Apart, if necessary.

4. Set the clock by using the Control Panel.

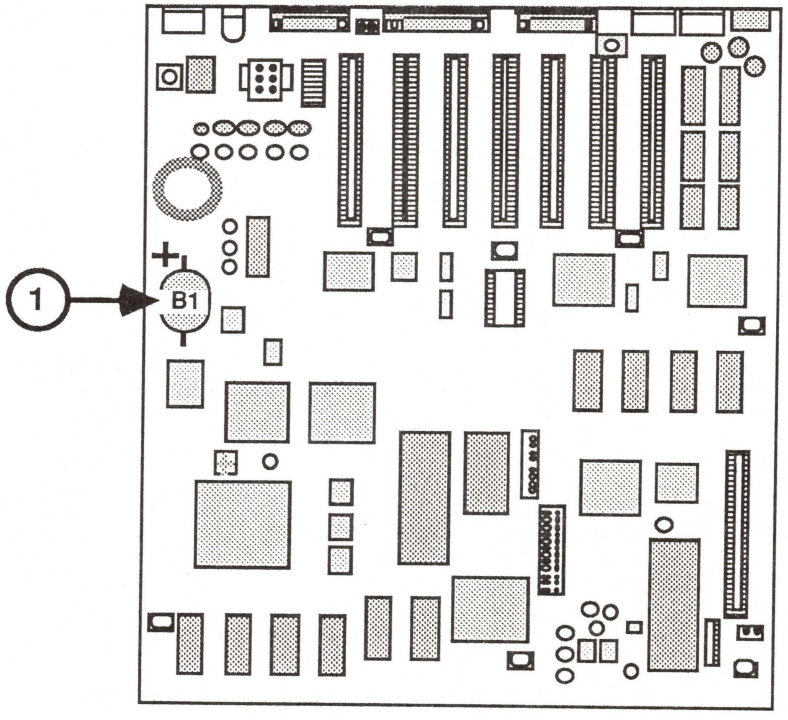

FIGURE 1

❑ APPLE IIGS FAN KIT

The optional Apple IIGS fan works with the vents on the top and bottom of the case to circulate fresh air through the inside of the case. This keeps the system running cooler and prolongs its life. The user installs the fan with the instructions provided in the *Apple IIGS Fan Kit Owner's Guide.*

The fan is mounted on the power supply by plastic hooks which snap into place. The connector from the fan is then plugged into two prongs marked "fan" on the logic board (located between the RGB monitor port and the disk drive port).

❑ PROFILE INTERFACE CARD MODIFICATION

Some ProFile interface cards cause incompatibility problems when used with the Apple IIGS. Adding a jumper wire, as described in the following procedure, corrects the problem.

Materials Required

Soldering iron (60 watt, 700 degrees)
Solder sucker
60/40 resin core solder
Small wire cutters
Piece of insulated wire with both ends stripped of about 1/4 inch of insulation

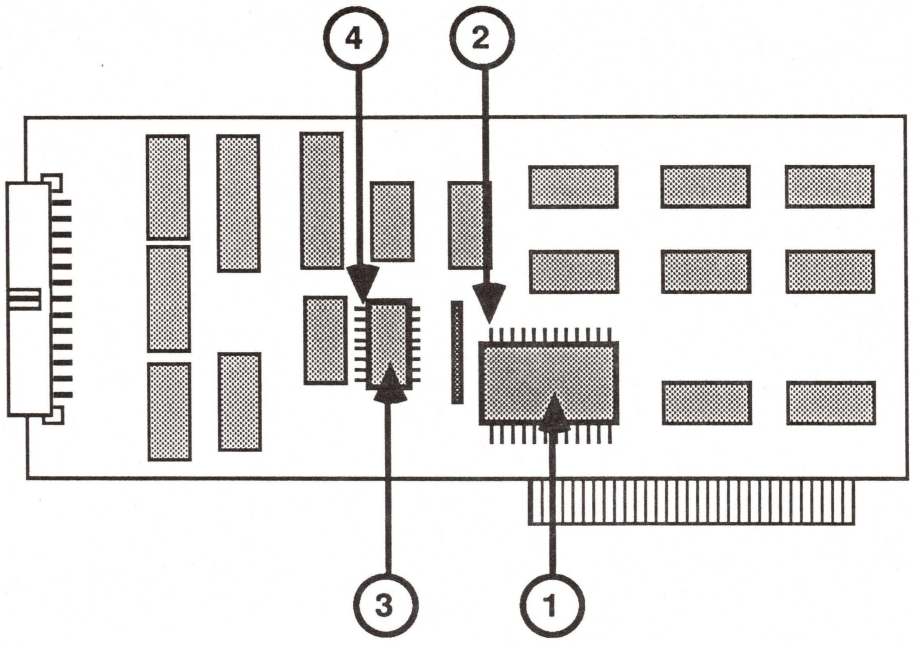

FIGURE 2

Procedure

1. On the IC at C6 (Figure 2, #1) locate pin 12 (Figure 2, #2).

2. On the IC at B4 (Figure 2, #3) locate pin 1 (Figure 2, #4).

3. Turn the board over and verify the locations on the back of the board.

   Note: If a jumper is already installed between these pins, exchange the interface card.

4. Solder one end of the wire to pin 1 on the IC at B4.

5. Solder the other end of the wire to pin 12 on the IC at C6.

6. Install the interface card in the Apple IIGS, and verify that the Control Panel is set correctly. Try to read and write to the ProFile. If the original problem persists, refer to the *ProFile Technical Procedures* for troubleshooting information.

❑ APPLE IIGS MEMORY EXPANSION CARD

Introduction

The Apple IIGS Memory Expansion Card adds 256K, 512K, or 1 megabyte of RAM to the 256K of RAM built into the Apple IIGS. The card is installed in the Memory Expansion slot on the Apple IIGS logic board.

256K Configuration

The dark rectangles in the figure below indicate the location of the RAM chips for 256K. These eight chips are soldered onto the card at the locations labeled UA1 through UA8 and are not replaceable.

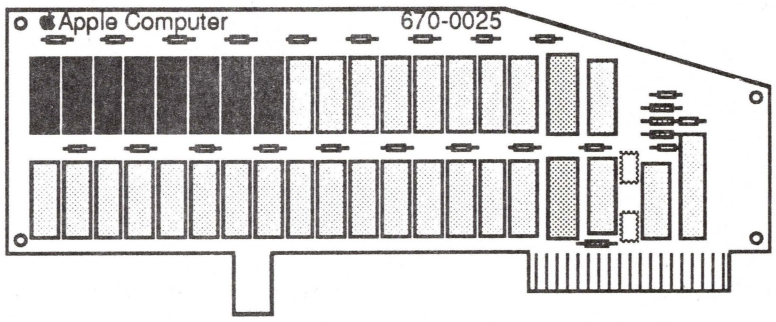

512K Configuration

The dark rectangles in the figure below indicate the location of the RAM chips for 512K. (The 256K RAM locations described above are included.) The eight additional chips (256K) must be installed in the sockets at locations UA9 through UA16 on the card. The jumper (J2) indicated as #1 below must be installed for the card to "see" the 512K RAM.

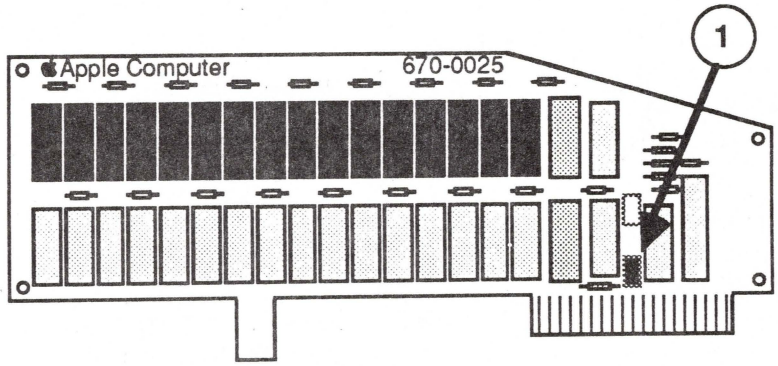

1 Megabyte Configuration

The dark rectangles in the figure below indicate the location of the RAM chips for 1 megabyte. (The 512K RAM locations described above are included.) The 16 additional chips (512K) must be installed at the locations labeled UB1 through UB16 on the card. The additional jumper (J1) indicated as #2 below must be installed for the card to see the full 1 megabyte.

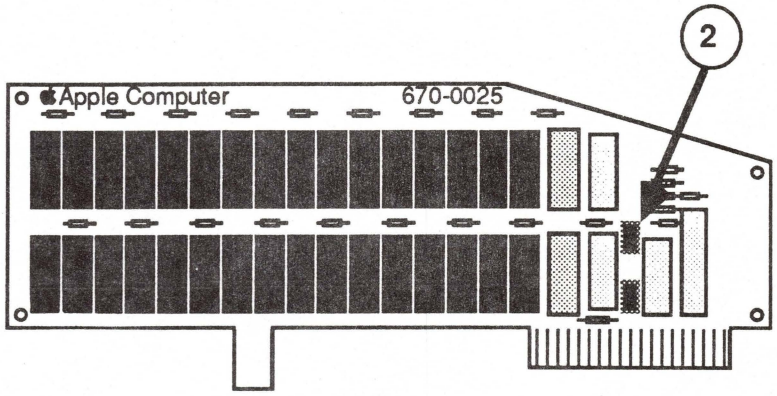

Troubleshooting

The Apple IIGS Memory Expansion Card exchange module is shipped **without** socketed RAM. All socketed RAM must be removed from the card before returning it to Apple.

Note: Some Apple IIGS Memory Expansion Cards have all the RAM soldered to the card. To exchange this type of card, you will need to fill out two SRO forms, one for the Memory Expansion Card and one for the additional 24 RAM chips.

Materials Required

Known-good Apple IIGS and 3.5-inch (or 5.25-inch) Disk Drive
Known-good RAM chips
Apple IIGS Memory Expansion Card
Apple II Diagnostic Diskette

Testing the RAM

1. Install the Apple IIGS Memory Card into the memory slot.

2. Start up the *Apple II Diagnostic Diskette.* Select the **Apple IIGS Memory Expansion Card Test** and run the test.

3. Two types of failures are possible on the Apple IIGS Memory Expansion Card:

   a) If a RAM chip fails, a numbered location on the board will be indicated on the screen.

      Note: The top row of RAM on the card has the markings UA1 through UA16 above the sockets (UA1 through UA8 are not replaceable). The bottom row of RAM on the card has the markings UB1 through UB16 below the sockets.

      1) Locate the RAM and replace it with a known-good RAM chip.

      2) Retest the card.

      3) Repeat steps 1) and 2) until the card passes.

   b) If the problem cannot be corrected by replacing a RAM chip, the screen will tell you to exchange the entire card.

      1) Remove all the RAM from the customer's card.

      2) Test the module being used for exchange.

      3) Install the customer's RAM onto the new module.

      4) Run the Apple IIGS Memory Expansion Card Test.

      5) Return to the beginning of this step until the card passes.

❑ APPLE IIGS UPGRADE FOR THE APPLE IIe

Introduction

The Apple IIGS Upgrade Kit gives IIe owners a direct upgrade path to the Apple IIGS and all of its features. The kit includes the Apple IIGS logic board, a new bottom pan, and various bags of hardware. For more information on the Apple IIGS and its features, refer to the manual *From Apple IIe to Apple IIGS: Performance Update* or Section 1, Basics.

Things To Remember

1. Follow the electrostatic discharge precautions listed on the next page.

2. The kit contains a product label on the underside of the bottom pan that bears the UL and CSA marks. These marks are valid only if the Apple IIe that is being retrofitted is UL and CSA approved.

   If the Apple IIe bottom pan does not carry the UL and CSA approvals, you must modify the product label on the retrofit bottom pan. Use an indelible black felt marker and block out the appropriate marking(s).

3. Before returning the system to the customer, run the *Apple 5.25 Innch Disk Drive Diagnostic* to verify that the system is functioning correctly. Refer to Section 3, Diagnostics.

4. If the customer's Apple IIe has a keyboard with a built-in keypad (Apple IIe Extended Keyboard) the keyboard must be modified in order to work correctly with the Apple IIGS. (The instructions are included in these procedures.)

5. Old Apple IIe cases made from structural foam will not fit correctly on the retrofit. To identify a structural foam case, remove the cover and look toward the back of the unit. If there are two oval plastic velcro pads, it is a foam case. Replace this case with the Apple IIe Case and Lid available from Apple.

6. Follow the return information included in the kit to ensure proper credit.

Electrostatic Discharge Prevention

Electrostatic Discharge (ESD) can cause severe damage to sensitive microcircuits. Just touching a chip or brushing it with a nylon sleeve can degrade a circuit so that it never performs again to specifications. Some microcircuits are sensitive to as little as 500 volts, or about one-sixth as much static electricity as you can feel.

Certain preventive measures must be taken to avoid ESD damage to the new logic board. When you are wrapping, installing, or replacing the logic board or any other microcircuit, observe the following precautions:

1. **Before handling boards or ROMs, ground yourself!** Wear a grounding wriststrap and attach it to your workbench pad. The pad must then be grounded to a workbench that is grounded to the building's ground.

2. **Ground the Apple IIe chassis to the same potential you hold.** Place the Apple IIe on the grounded workbench pad. Be sure the chassis is in contact with the workbench pad at all times OR connect the chassis to the workbench pad via alligator clips.

3. **Use antistatic bags for carrying boards and ROMs.** Whenever the ROMs or board are to be stored or moved anywhere, first put them in an antistatic bag. Be sure to touch the bags before touching the ROMs.

4. **Handle ROMs by the body, not the leads.** You may safely touch the leads only if you are grounded.

5. **Do not wear polyester clothing or bring plastic, vinyl, or styrofoam into the area.** The static field around these items cannot be removed.

6. **Do not place board or ROMs on any metal surface.** Place them on the grounded workbench pad or on antistatic or nonconductive foam.

Materials Required

The following hardware is included in the kit:

Bottom pan
Apple IIGS logic board
Keyboard support brackets
Apple IIe shielding strip

The following will be in plastic bags labeled with the corresponding part numbers. The hardware shown below with an asterisk (*) may not be needed to perform the upgrade. This will depend on the version of the Apple IIe system being upgraded.

Nameplates (2) (607-5182)
Power supply screws (4) (607-5176)*
Bottom pan screws (9) (607-5177)*
Logic board mounting screws (2) (607-5178)
Keyboard and bracket mounting screws (8) (607-5179)*
U-Nuts (9) (607-5180)*
PCB Supports (9) (607-5181)

Note: The bag of screws labeled 607-5193 is for Canadian upgrades only.

The following tools are needed:

ESD equipment
Phillips head screwdriver
Flathead screwdriver
Small flathead screwdriver
Small needlenose pliers

Installation Instructions

Before you begin, be sure to read the instructions on ESD prevention and all the information under "Things to Remember."

Keyboard Information

If the keyboard is mounted on the Apple IIe case, do not remove it. If the keyboard is mounted on brackets and not connected to the case, remove the keyboard.

If the customer has an Apple IIe Extended Keyboard, you will have to make a modification to the keyboard. Turn to "Apple IIe Extended Keyboard Modification" and perform the procedure now.

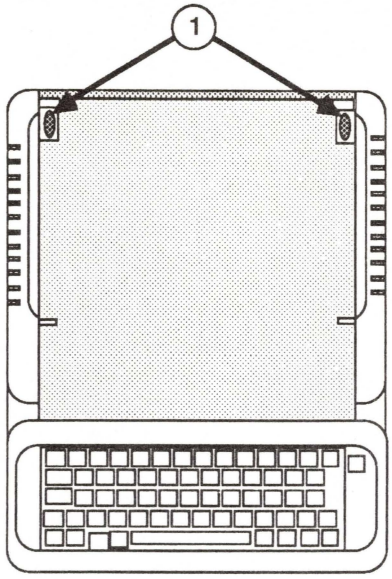

FIGURE 3

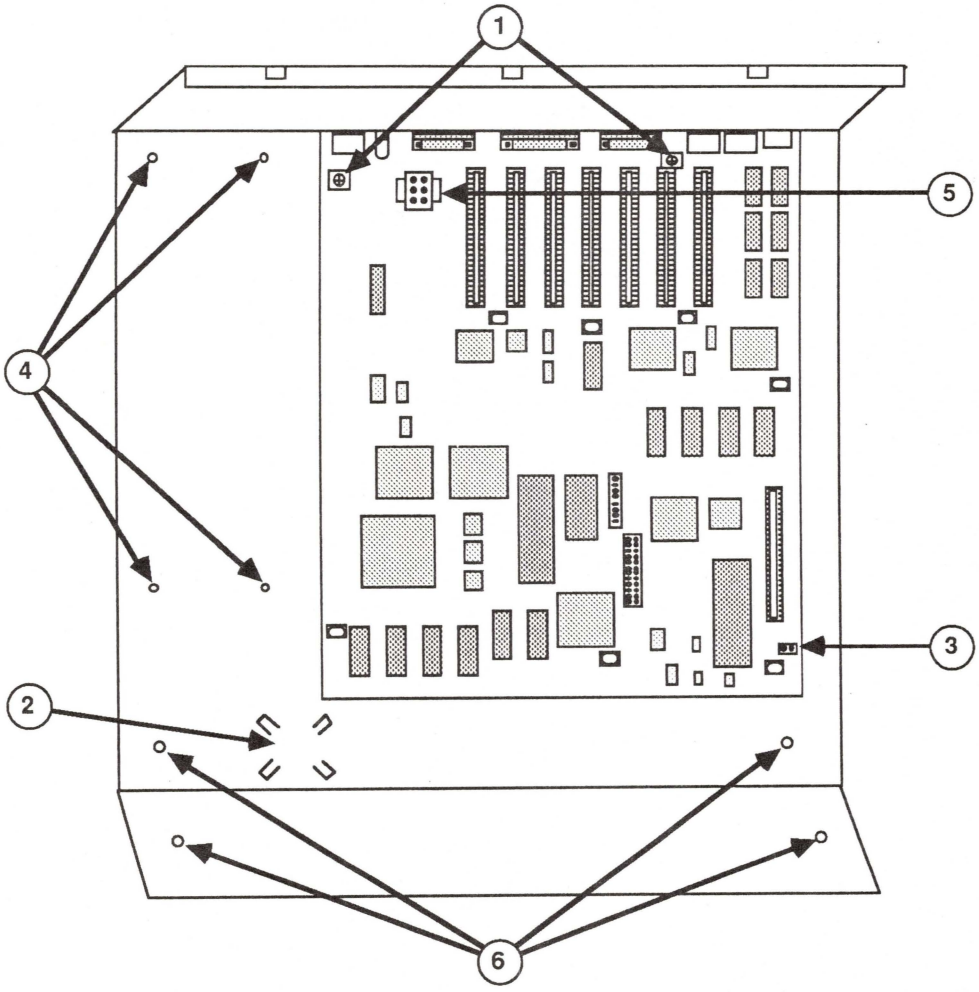

FIGURE 4

Case Information

Old Apple IIe cases made from structural foam will not fit correctly on the retrofit. To identify a structural foam case, remove the lid and look toward the back of the unit. If there are two oval plastic velcro pads (see Figure 3, #1), it is a foam case. Discard the case and replace it with a plastic case. The plastic case is available from Apple under the name "Apple IIe Case and Lid, Beige."

1. Remove the following from the customer's Apple IIe (if necessary, refer to *Apple IIe Technical Procedures*, Section 1, Take-Apart).

   Top cover and housing
   Power supply
   Speaker
   Keyboard

2. Install the nine PCB supports into the nine square holes on the new bottom pan.

3. Install the Apple IIGS logic board onto the PCB supports on the new bottom pan. Install the two logic board mounting screws (Figure 4, #1).

4. Install the customer's speaker on the new chassis (Figure 4, #2).

5. Connect the speaker cable to its plug on the logic board (Figure 4, #3).

6. Align the screw mounts on the customer's power supply with the screw holes on the new bottom pan (Figure 4, #4). Insert and tighten the four power supply screws.

7. Connect the power supply connector to its socket on the logic board (Figure 4, #5).

8. Install the customer's keyboard.

   If the keyboard is mounted on the case, skip to step 11.

   If the keyboard is mounted on brackets, continue to step 9.

9. Using four of the screws, install the brackets (one on each side) on the bottom pan (Figure 4, #6).

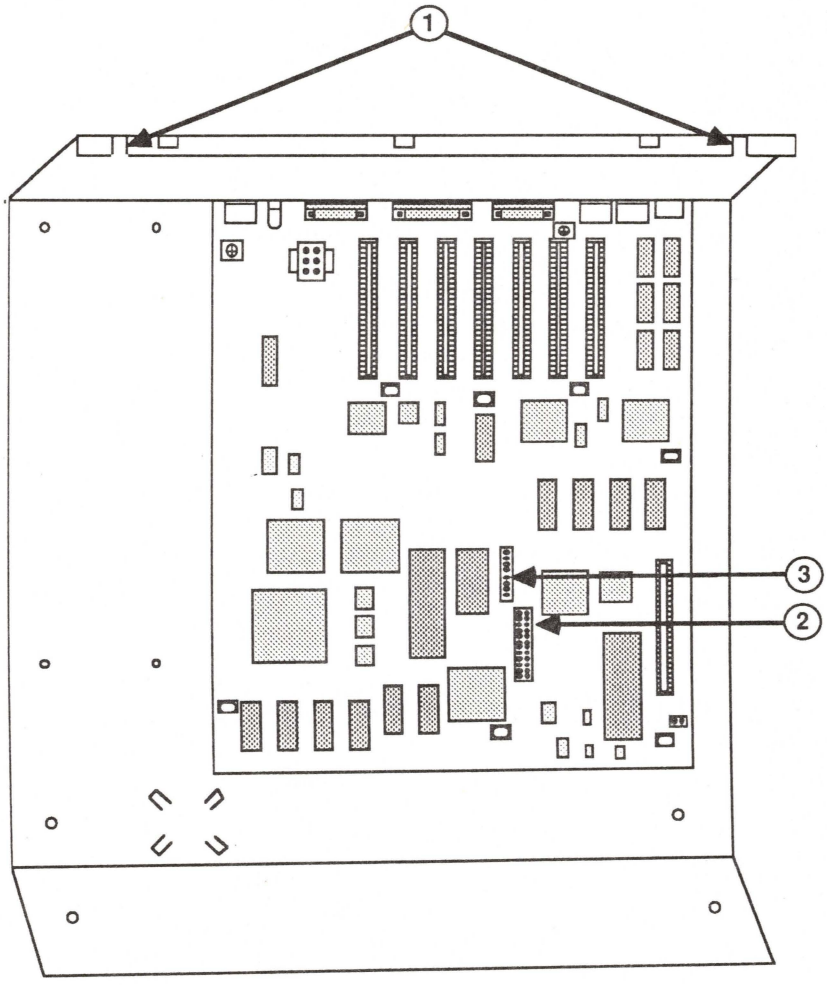

FIGURE 5

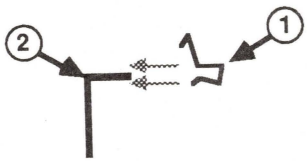

FIGURE 6

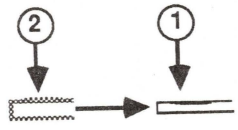

FIGURE 7

10. Position the keyboard on the brackets and insert the four remaining screws.

    You may need to adjust the position of the keyboard when installing the case to ensure an even gap between the keyboard and case.

11. Install the shielding strip on the rear of the bottom pan between the two notches (Figure 5, #1). Figure 6 shows a side view of the shielding strip (Figure 6, #1) being slid onto the rear lip of the bottom pan (Figure 6, #2).

12. Check the plastic case to ensure that it has u-nuts installed on all the screw holes. If they are not installed, refer to Figure 7, which is a side view of one hole (Figure 7, #1) with the u-nut being slipped into position (Figure 7, #2).

13. Remove the two old nameplates on the lid by inserting a small flatblade screwdriver into the hole in the lid underneath the nameplates. Install the new ones, and destroy the old ones.

14. Position the customer's case on the new chassis.

15. Connect the keyboard cable to its socket on the logic board (see Figure 5, #2).

16. Insert and tighten the screws to hold the case in place.

    Note: If the customer has an Apple IIe Numeric Keypad, plug it into the connector shown in Figure 5, #3.

17. Run the functional test on the system to verify that it is working correctly. (Refer to Section 3, Diagnostics.)

18. Return the appropriate items to Apple. Follow the instructions included in the kit.

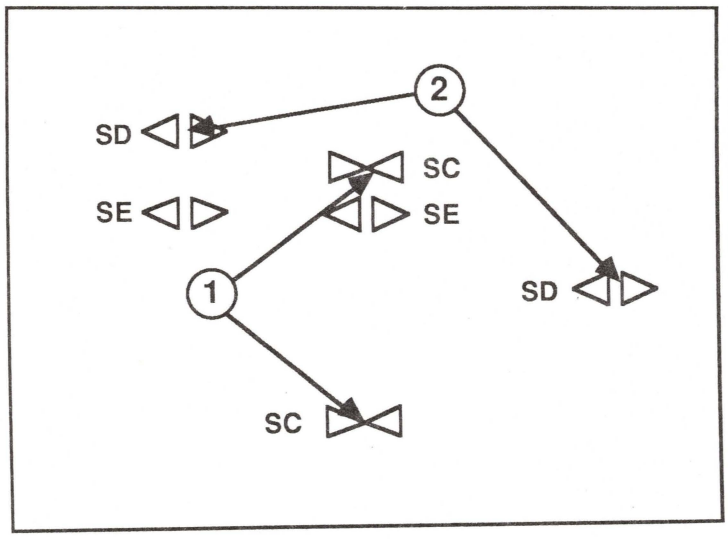

FIGURE 8A

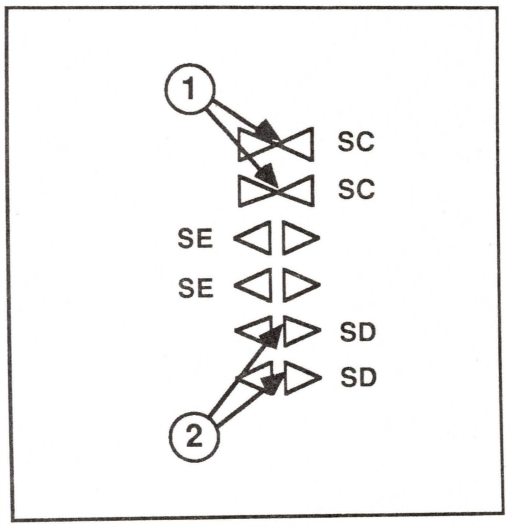

FIGURE 8B

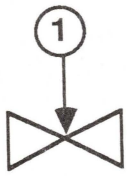

FIGURE 9

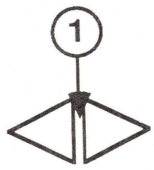

FIGURE 10

Apple IIe Extended Keyboard Modification

There are two keyboards available that have built-in keypads. In order for either of the keyboards to work correctly with the Apple IIGS logic board, two jumper pads need to be cut and two jumper pads need to be soldered.

Keyboard Identification

The pads are located in different areas on the two keyboards. Identify the keyboards as Mitsumi or TCI. The Mitsumi keyboard has the name Mitsumi in the lower left corner on the back of the keyboard.

Keyboard Figures

As you follow the procedure, refer to Figure 8-A for the Mitsumi keyboards and Figure 8-B for the TCI keyboards.

Materials Required

Keyboard with built-in keypad to be modified
X-acto knife
Soldering iron
Solder sucker
60/40 resin core solder
Digital ohmmeter

CAUTION: *When cutting the two jumper pads, be extremely careful so that no other traces will be cut.*

Instructions

1. Turn the keyboard so that the trace side is up and the cable connector is at the top. The jumper pads are located under the cable connector on the circuit board.

2. Locate the two jumper pads marked SC (Figure 8, #1). Using the X-acto knife, separate the two jumper pads, one pair at a time, by applying even pressure to the location indicated in Figure 9, #1.

3. Use the ohmmeter to verify that the two jumper pads marked SC are not touching.

4. Locate the two jumper pads marked SD (Figure 8, #2). Apply a little bit of solder to the iron. Then, with the tip touching the jumper pads, one pair of pads at a time, apply the new solder to the location indicated in Figure 10, #1.

5. Use the ohmmeter to verify that both SD jumper pads are now connected.

Apple Technical Procedures

Apple IIGS

Section 6 – Illustrated Parts List

❑ CONTENTS

6.3 Main Assembly (Figure 1)
6.5 Base Assembly (Figure 2)
6.7 Keyboard (Figure 3)
6.9 Mouse (Figure 4)
6.11 Cables (Figure 5)
6.13 Upgrade (Figure 6)

The figures and lists in this section include all piece parts that can be purchased separately from Apple for the Apple IIGS, along with their part numbers. These are the only parts available from Apple. Refer to your *Apple Service Programs Manual* for prices.

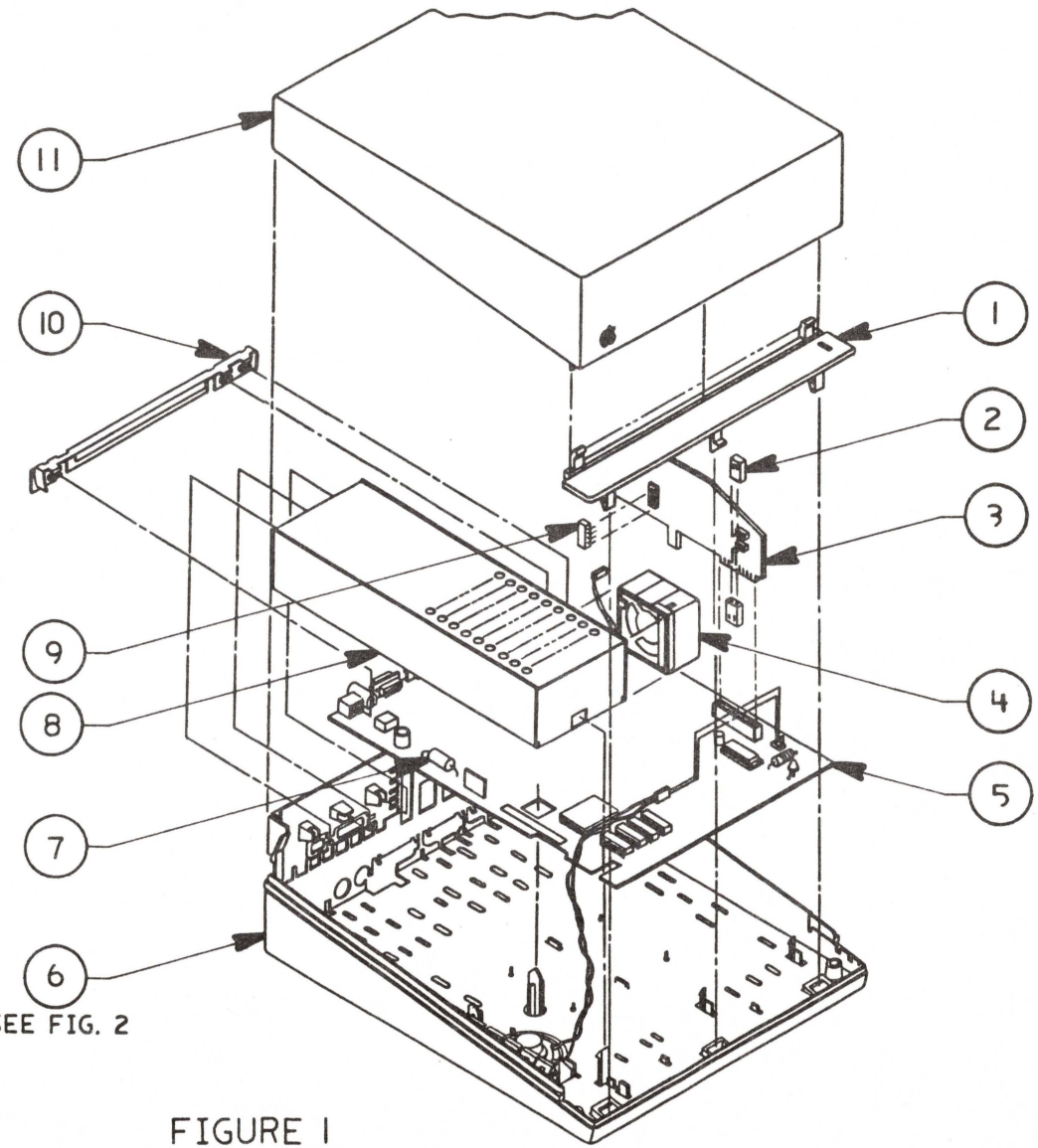

FIGURE 1

❑ APPLE IIGS – MAIN ASSEMBLY (Figure 1)

Item	Part No.	Description
1	607-5006	Case Hinge, Apple IIGS
2	517-1230	Jumper, Apple IIGS RAM Expansion Card
3	661-0336	Apple IIGS Memory Expansion Card
4	607-5007	Fan
5	661-0334	Apple IIGS Main Logic Board
6	607-5005	Base, Apple IIGS
7	742-0007	Battery, Lithium
8	661-0335	Apple IIGS Power Supply
9	334-0021	RAM, 256K
10	805-0169	EMI Fence
11	607-5004	Top Cover, Apple IIGS

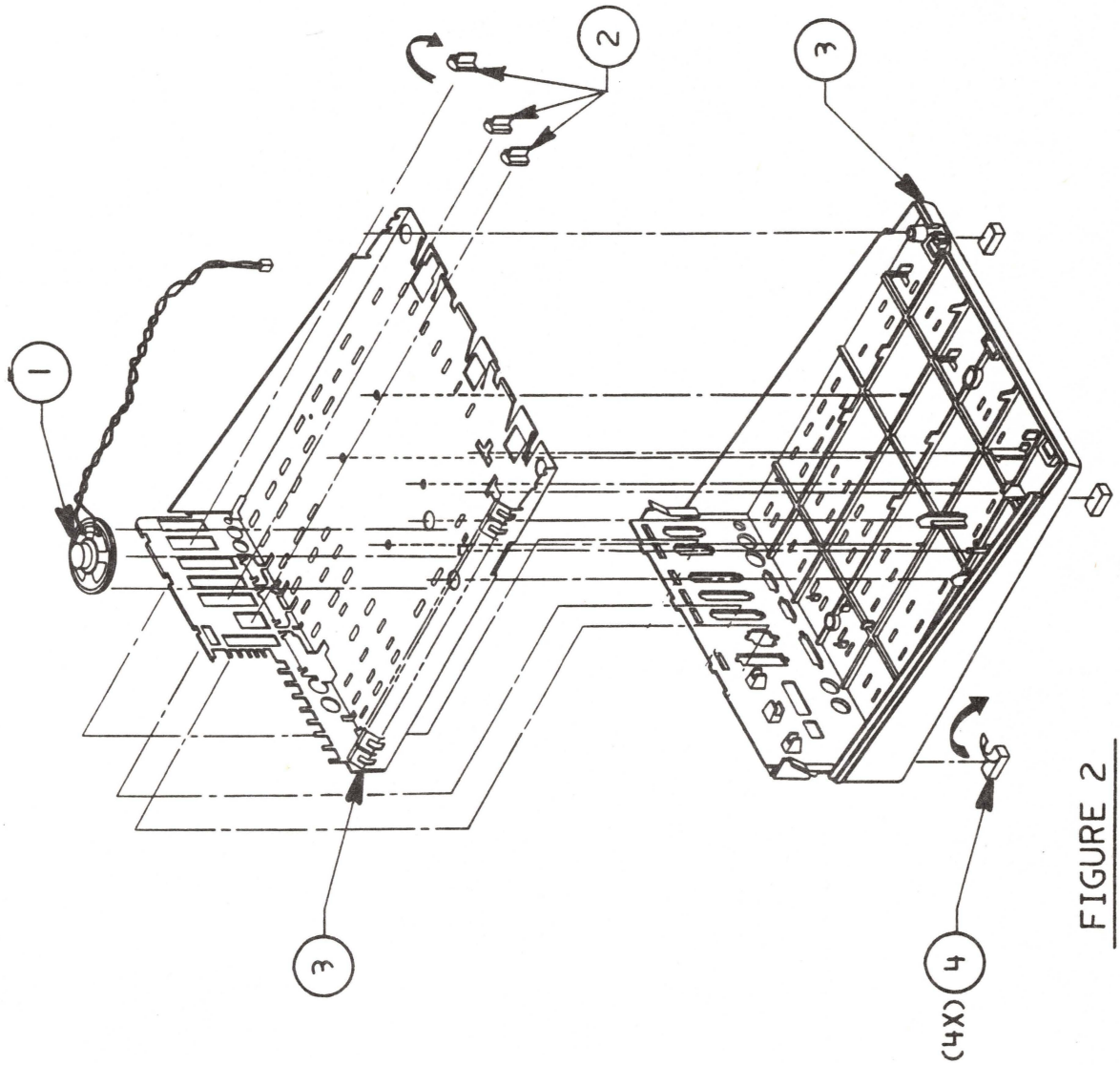

FIGURE 2

❑ APPLE IIGS – BASE ASSEMBLY (Figure 2)

Item	Part No.	Description
1	607-5174	Speaker
2	805-0166	Spring Clip
3	607-5005	Apple IIGS Base
4	865-0024	Apple IIGS Foot

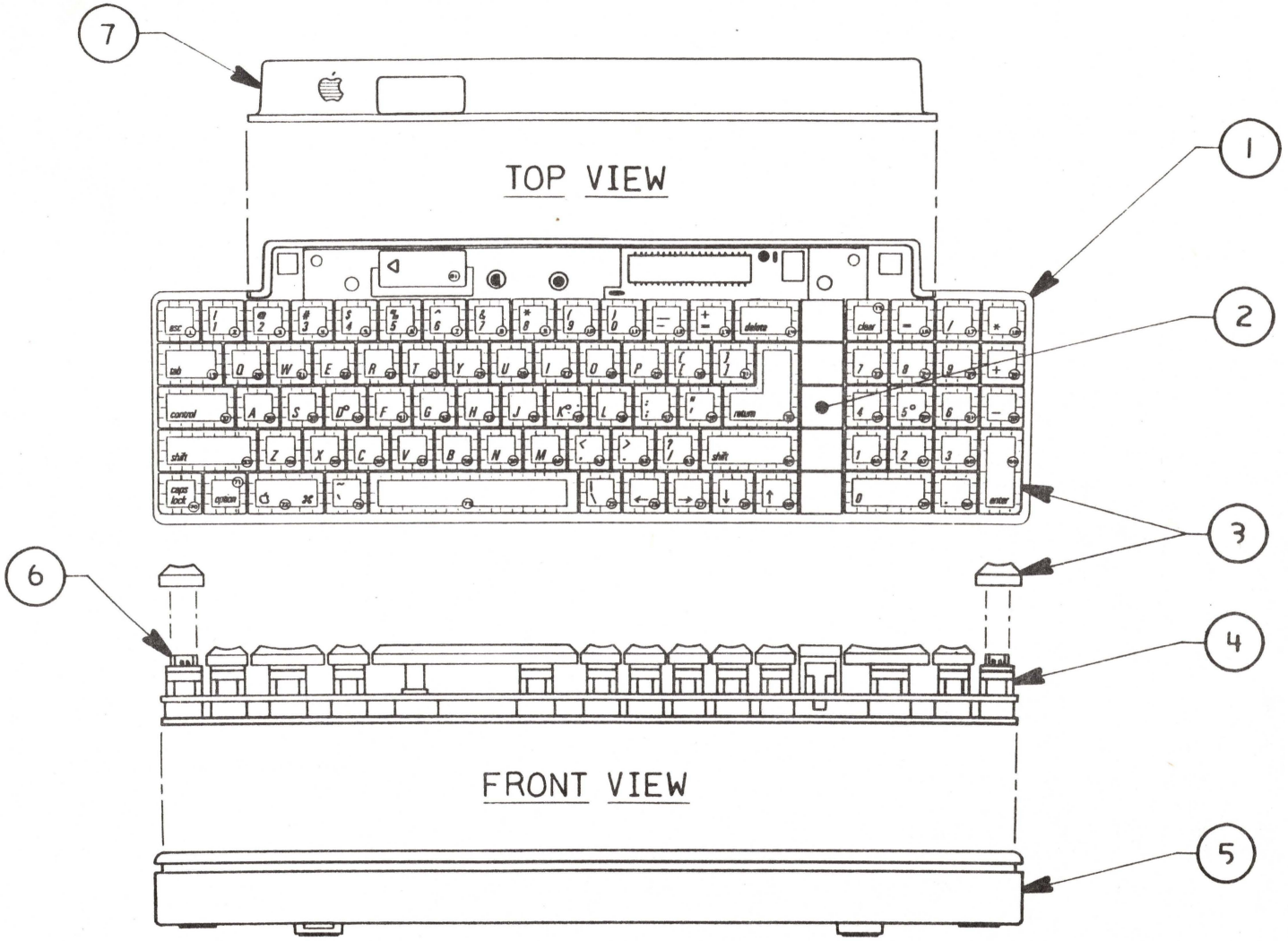

FIGURE 3

❑ APPLE IIGS – KEYBOARD (Figure 3)

Item	Part No.	Description
1	661-0337	Apple DeskTop Bus Keyboard
2	815-0418	Keypad Spacer Case, ADB Keyboard
3	658-7093	Keycap Set, ADB Keyboard
4	076-0209	Keyswitch Set, ADB Keyboard
5	815-0416	Case Bottom, ADB Keyboard
6	970-1263	Alps Locking Keyswitch
7	815-0417	Case Top, ADB Keyboard

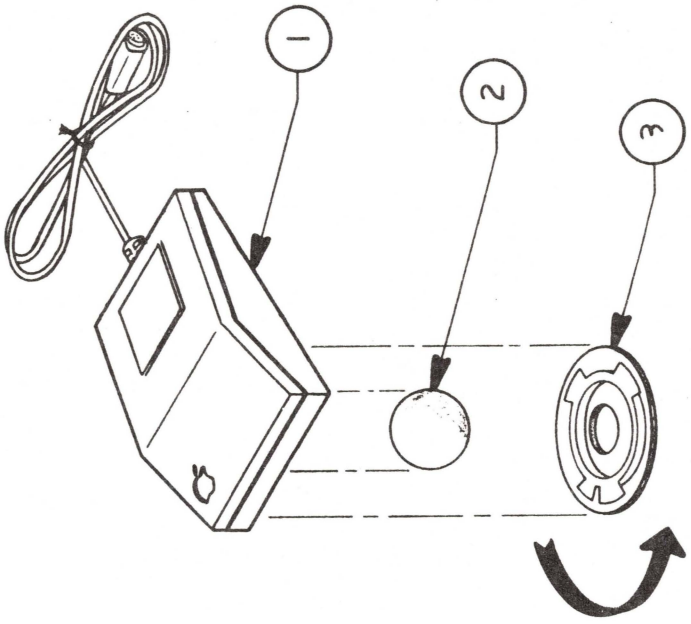

FIGURE 4

❑ APPLE IIGS – MOUSE (Figure 4)

Item	Part No.	Description
1	661-0338	Apple DeskTop Bus Mouse
2	699-8001	Mouse Ball, Rubber Coated
3	076-0231	Mouse Ball Retainer, ADB

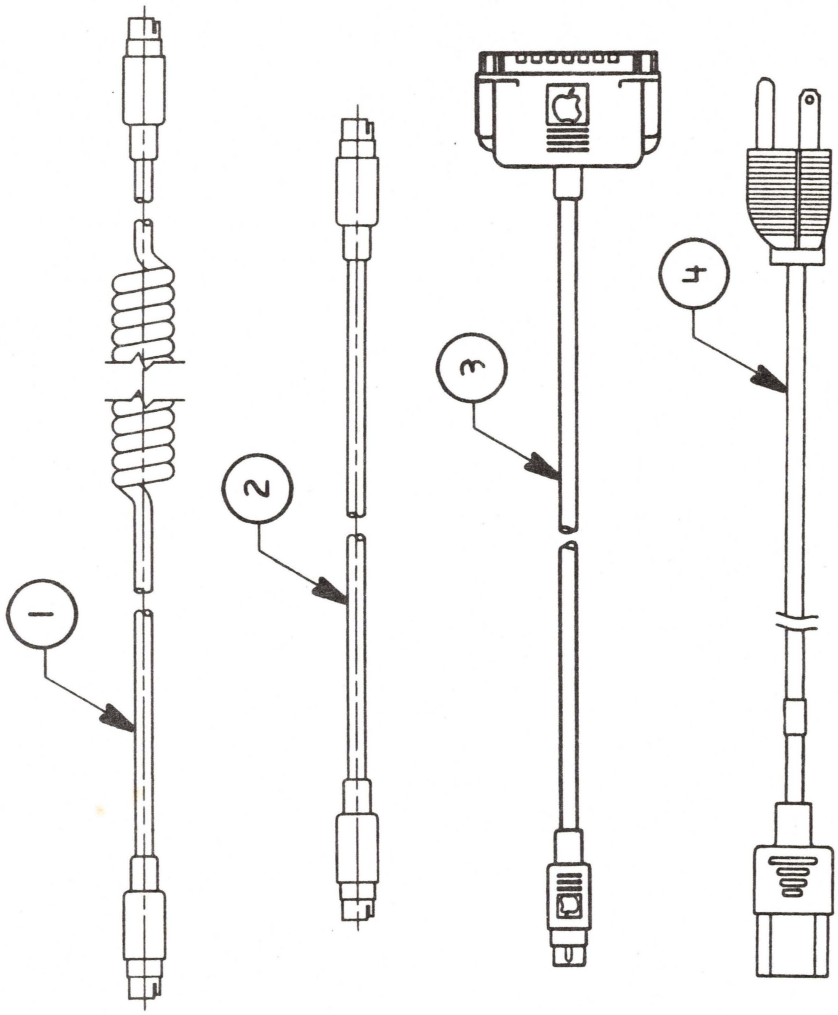

FIGURE 5

❑ APPLE IIGS – CABLES (Figure 5)

Item	Part No.	Description
1	590-0361	ADB Keyboard Cable
2	590-0109	ADB Cable
3	590-0550	Peripheral Adapter Cable, Apple IIGS
4	590-0380	AC Power Cable, Platinum

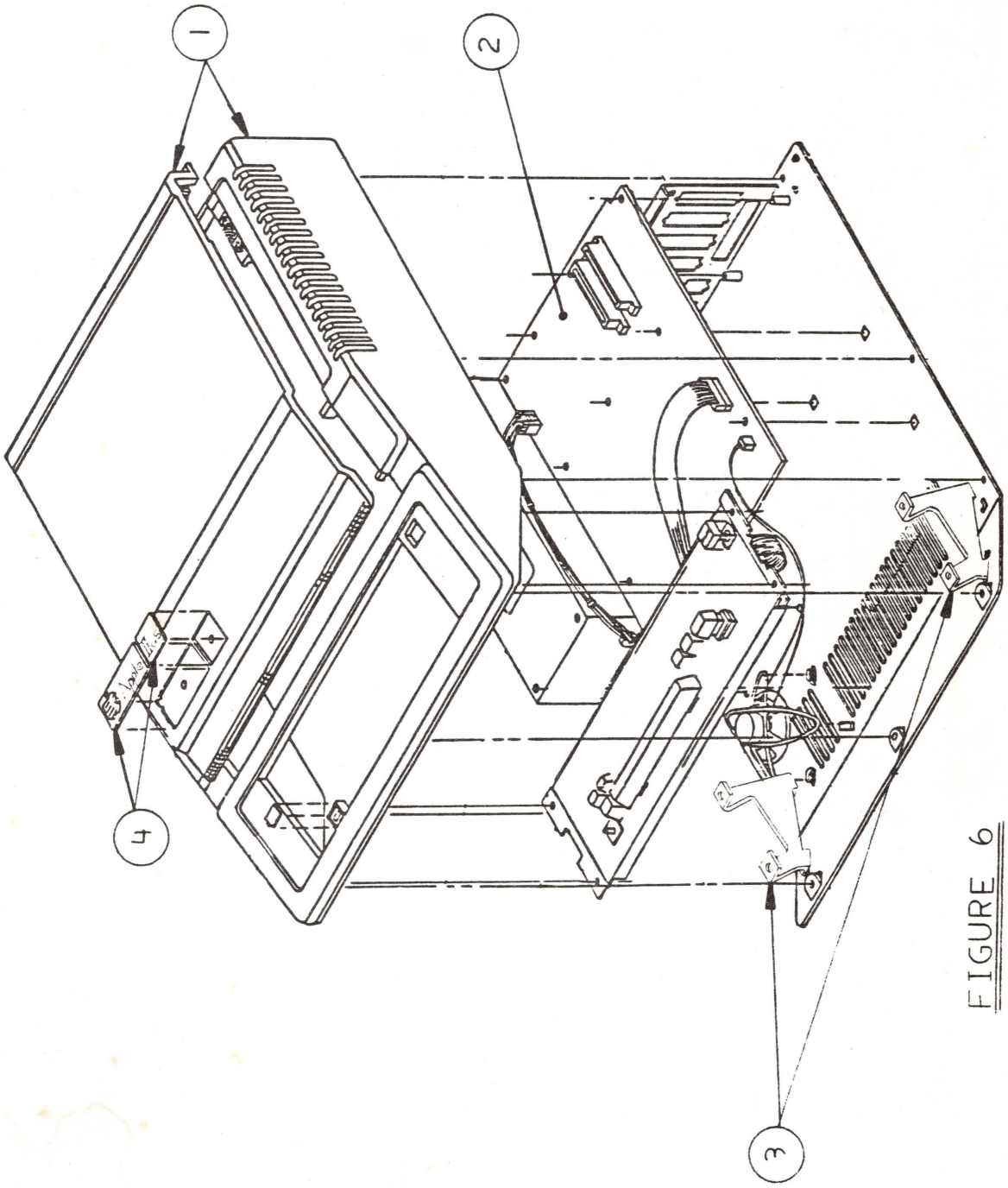

FIGURE 6

❑ APPLE IIGS – UPGRADE (Figure 6)

Item	Part No.	Description
1	076-0127	Apple IIe Case and Lid, Beige
2	661-0334	Apple IIGS Main Logic Board
3	805-0168	Bracket, AIIGS Upgrade Keyboard
4	607-5182	Nameplates, AIIGS Upgrade